VERSTEEL

# Price List

JUMP TO PRICING **CLICK HERE**

TABLES

**Eliga**
01 March 2023

# Eliga
Round



**Questions?**
800 876 2120

| | | | | | | | | |
|---|---|---|---|---|---|---|---|---|
| | | | top › | Laminate PVC | Laminate Wood | Laminate 1 ¼" Wood | Veneer Wood | Veneer 1 ¼" Wood |
| | | | edge › | Flat | Flat | Square | Flat | Square |
| | | | edge ordering code › | **LP7R** | **LW7R** | **LWS7** | **VW7R** | **VWS7** |
| | | | top thickness › | 1" | 1" | 1" | 1" | 1" |
| | | | top thickness price › | 1" | 1" | 1" | 1" | 1" |
| **Base Style** | **Table Description** | **Model #** | **Product Wt** | | | | | |
| X1 | 24 Fix | **EGX1 24RDFX** | 30 | 953 | 1310 | 1669 | 1986 | 2121 |
| | 30 Fix | **EGX1 30RDFX** | 35 | 1091 | 1541 | 1989 | 2334 | 2456 |
| | 36 Fix | **EGX1 36RDFX** | 44 | 1259 | 1797 | 2334 | 2471 | 2646 |
| | 42 Fix | **EGX1 42RDFX** | 53 | 1501 | 2124 | 2750 | 2991 | 3215 |
| | 48 Fix | **EGX1 48RDFX** | 64 | 1528 | 2247 | 2962 | 3497 | 3773 |
| X1S | 24 Stand Fix | **EGX1S 24RDFX** | 37 | 988 | 1345 | 1705 | 2021 | 2157 |
| | 30 Stand Fix | **EGX1S 30RDFX** | 44 | 1121 | 1570 | 2017 | 2364 | 2531 |
| | 36 Stand Fix | **EGX1S 36RDFX** | 52 | 1289 | 1826 | 2364 | 2501 | 2675 |
| | 42 Stand Fix | **EGX1S 42RDFX** | 62 | 1527 | 2152 | 2780 | 3019 | 3242 |
| | 48 Stand Fix | **EGX1S 48RDFX** | 73 | 1557 | 2274 | 2990 | 3533 | 3802 |

X1

X1S

**Note:** Eliga X bases with power and data ship with modified top plates. Contact Versteel Customer Service for application specifics.

**Note:** Casters not available on stand up height.

**To Order, Specify...**
1. Model Number
2. Top Material
3. Edge Style and Thickness
4. Edge Color
5. Base Color
6. Additional Options

| Base Options | Code | Price |
|---|---|---|
| Casters (4), Dual Wheel Black Hard Wheel | CAS55 | $ 164 |
| Casters (4), Dual Wheel Black Soft Wheel<br>Available on X1 base | CAS57 | $ 164 |
| Self-Leveling Glides (4) | GLD04 | $ 47 |

**Finish Options**

| | |
|---|---|
| Chrome | $ 624 |
| Nickel | $ 682 |
| Powder Coat, Standard | n/c |
| Powder Coat, Premium | $ 158 |
| Platinum | $ 469 |

Transparent Powder Coat available by sample approval

**Top Options**

| | | |
|---|---|---|
| Special Laminate | TSP | call |
| Custom Cutout (per cutout) | TCC | $ 115 |

**Power + Data Options**

Please reference the Power + Data Price List

**NOTE** HEMISPHERE AND NODE ARE RECOMMENDED FOR USE WITH ELIGA X BASES

**Wire Management Options**

| | | |
|---|---|---|
| 1 Round Grommet, Provide Location Print | WRG | $ 73 |

# Eliga
Square



**Questions?**
800 876 2120

| | | | | | | | | |
|---|---|---|---|---|---|---|---|---|
| | | | top › | Laminate PVC | Laminate Wood | Laminate 1 ¼" Wood | Veneer Wood | Veneer 1 ¼" Wood |
| | | | edge › | Flat | Flat | Square | Flat | Square |
| | | | edge ordering code (square corner) › | **LP7S** | **LW7S** | **LWS7** | **VW7S** | **VWS7** |
| | | | top thickness › | 1" | 1" | 1" | 1" | 1" |
| | | | top thickness price › | 1" | 1" | 1" | 1" | 1" |
| **Base Style** | **Table Description** | **Model #** | **Product Wt** | | | | | |
| X1 | 24 Fix | **EGX1 24SQFX** | 33 | 953 | 1310 | 1669 | 1986 | 2121 |
| | 30 Fix | **EGX1 30SQFX** | 40 | 1091 | 1541 | 1989 | 2334 | 2456 |
| | 36 Fix | **EGX1 36SQFX** | 50 | 1259 | 1797 | 2334 | 2471 | 2646 |
| | 42 Fix | **EGX1 42SQFX** | 60 | 1501 | 2124 | 2750 | 2991 | 3215 |
| | 48 Fix | **EGX1 48SQFX** | 75 | 1528 | 2247 | 2962 | 3497 | 3773 |
| X1S | 24 Stand Fix | **EGX1S 24SQFX** | 40 | 988 | 1345 | 1705 | 2021 | 2157 |
| | 30 Stand Fix | **EGX1S 30SQFX** | 49 | 1121 | 1570 | 2017 | 2364 | 2531 |
| | 36 Stand Fix | **EGX1S 36SQFX** | 58 | 1289 | 1826 | 2364 | 2501 | 2675 |
| | 42 Stand Fix | **EGX1S 42SQFX** | 69 | 1527 | 2152 | 2780 | 3019 | 3242 |
| | 48 Stand Fix | **EGX1S 48SQFX** | 84 | 1557 | 2274 | 2990 | 3533 | 3802 |

X1

X1S

**Note:** Eliga X bases with power and data ship with modified top plates. Contact Versteel Customer Service for application specifics.

**Note:** Casters not available on stand up height.

**To Order, Specify...**
1. Model Number
2. Top Material
3. Edge Style and Thickness
4. Edge Color
5. Base Color
6. Additional Options

| Base Options | Code | Price |
|---|---|---|
| Casters (4), Dual Wheel Black Hard Wheel | CAS55 | $ 164 |
| Casters (4), Dual Wheel Black Soft Wheel<br>Available on X1 base | CAS57 | $ 164 |
| Self-Leveling Glides (4) | GLD04 | $ 47 |

**Finish Options**

| | |
|---|---|
| Chrome | $ 624 |
| Nickel | $ 682 |
| Powder Coat, Standard | n/c |
| Powder Coat, Premium | $ 158 |
| Platinum | $ 469 |

Transparent Powder Coat available by sample approval

**Top Options**

| | | |
|---|---|---|
| Special Laminate | TSP | call |
| Custom Cutout (per cutout) | TCC | $ 115 |

**Power + Data Options**

Please reference the Power + Data Price List

**NOTE** HEMISPHERE AND NODE ARE RECOMMENDED FOR USE WITH ELIGA X BASES

**Wire Management Options**

| | | |
|---|---|---|
| 1 Round Grommet, Provide Location Print | WRG | $ 73 |

# Eliga
Rectangle



**Questions?**
800 876 2120

| | | | | | | | | |
|---|---|---|---|---|---|---|---|---|
| | | | top › | Laminate PVC | Laminate Wood | Laminate 1 ¼" Wood | Veneer Wood | Veneer 1 ¼" Wood |
| | | | edge › | Flat | Flat | Square | Flat | Square |
| | | | edge ordering code (square corner) › | **LP7S** | **LW7S** | **LWS7** | **VW7S** | **VWS7** |
| | | | top thickness › | 1" | 1" | 1" | 1" | 1" |
| | | | top thickness price › | 1" | 1" | 1" | 1" | 1" |
| **Base Style** | **Table Description** | **Model #** | **Product Wt** | | | | | |
| E1 | 18 x 48 Fix | **EGE1 1848REFX** | 46 | 897 | 1354 | 1864 | 2032 | 2196 |
| | 18 x 48 Fix w/FixMod | **EGE1 1848REFX XM** | 61 | 1284 | 1741 | 2253 | 2420 | 2585 |
| | 18 x 60 Fix | **EGE1 1860REFX** | 55 | 1219 | 1788 | 2393 | 2733 | 2948 |
| | 18 x 60 Fix w/FixMod | **EGE1 1860REFX XM** | 70 | 1605 | 2175 | 2780 | 3121 | 3338 |
| | 18 x 72 Fix | **EGE1 1872REFX** | 64 | 1388 | 2029 | 2726 | 3168 | 3420 |
| | 18 x 72 Fix w/FixMod | **EGE1 1872REFX XM** | 79 | 1931 | 2572 | 3268 | 3711 | 3963 |
| | 18 x 84 Fix | **EGE1 1884REFX** | 73 | 1797 | 2501 | 3292 | 3682 | 3969 |
| | 18 x 84 Fix w/FixMod | **EGE1 1884REFX XM** | 88 | 2340 | 3043 | 3835 | 4227 | 4512 |
| | 18 x 96 Fix | **EGE1 1896REFX** | 82 | 1858 | 2664 | 3546 | 4080 | 4400 |
| | 18 x 96 Fix w/FixMod | **EGE1 1896REFX XM** | 97 | 2402 | 3206 | 4089 | 4623 | 4943 |

**To Order, Specify...**
1. Model Number
2. Top Material
3. Edge Style and Thickness
4. Edge Color
5. Base Color
6. Additional Options

| Base Options | Code | Price |
|---|---|---|
| Alternate Table Height 32" & Under | BAH | $ 188 |
| Alternate Table Height 32" & Over | BSP | call |
| Casters (4), Dual Wheel Black Hard Wheel (to 72" length) | CAS50 | $ 164 |

| Finish Options | |
|---|---|
| Chrome | $ 624 |
| Nickel | $ 682 |
| Powder Coat, Standard | n/c |
| Powder Coat, Premium | $ 158 |
| Platinum | $ 469 |

Transparent Powder Coat available by sample approval

| Top Options | | |
|---|---|---|
| Table Link (all four sides) | TLK | $ 241 |
| Table Link (18" ends only) | TLE | $ 129 |
| Special Laminate | TSP | call |
| Custom Cutout (per cutout) | TCC | $ 115 |

**Power + Data Options**

Please reference the Power + Data Price List

| Wire Management Options | | |
|---|---|---|
| 1 Oval Brush Grommet, Provide Location Print | WOG | $ 93 |
| 1 Round Grommet, Provide Location Print | WRG | $ 73 |
| Eliga Wire Manager (each) | WEL | $ 53 |

# Eliga
Rectangle



**Questions?**
800 876 2120

| | | | top › | Laminate PVC | Laminate Wood | Laminate 1 ¼" Wood | Veneer Wood | Veneer 1 ¼" Wood |
|---|---|---|---|---|---|---|---|---|
| | | | edge › | Flat | Flat | Square | Flat | Square |
| | | | | | | | | |
| | | | edge ordering code (square corner) › | **LP7S** | **LW7S** | **LWS7** | **VW7S** | **VWS7** |
| | | | top thickness › | 1" | 1" | 1" | 1" | 1" |
| | | | top thickness price › | 1" | 1" | 1" | 1" | 1" |
| **Base Style** | **Table Description** | **Model #** | **Product Wt** | | | | | |
| E1 | 24 x 48 Fix | **EGE1 2448REFX** | 55 | 1307 | 1864 | 2423 | 2443 | 2607 |
| | 24 x 48 Fix w/FixMod | **EGE1 2448REFX XM** | 70 | 1695 | 2253 | 2810 | 2830 | 2995 |
| | 24 x 60 Fix | **EGE1 2460REFX** | 66 | 1487 | 2139 | 2791 | 2989 | 3206 |
| | 24 x 60 Fix w/FixMod | **EGE1 2460REFX XM** | 81 | 1874 | 2525 | 3179 | 3376 | 3596 |
| | 24 x 72 Fix | **EGE1 2472REFX** | 77 | 1603 | 2347 | 3093 | 3362 | 3612 |
| | 24 x 72 Fix w/FixMod | **EGE1 2472REFX XM** | 92 | 1993 | 2738 | 3482 | 3750 | 4001 |
| | 24 x 84 Fix | **EGE1 2484REFX** | 88 | 1853 | 2690 | 3528 | 3713 | 4000 |
| | 24 x 84 Fix w/FixMod | **EGE1 2484REFX XM** | 103 | 2397 | 3233 | 4071 | 4257 | 4543 |
| | 24 x 96 Fix | **EGE1 2496REFX** | 99 | 1908 | 2839 | 3769 | 4111 | 4434 |
| | 24 x 96 Fix w/FixMod | **EGE1 2496REFX XM** | 114 | 2451 | 3381 | 4312 | 4654 | 4977 |

**To Order, Specify...**
1. Model Number
2. Top Material
3. Edge Style and Thickness
4. Edge Color
5. Base Color
6. Additional Options

| Base Options | Code | Price |
|---|---|---|
| Alternate Table Height 32" & Under | BAH | $ 188 |
| Alternate Table Height 32" & Over | BSP | call |
| Casters (4), Dual Wheel Black Hard Wheel (to 72" length) | CAS50 | $ 164 |

| Finish Options | |
|---|---|
| Chrome | $ 624 |
| Nickel | $ 682 |
| Powder Coat, Standard | n/c |
| Powder Coat, Premium | $ 158 |
| Platinum | $ 469 |

Transparent Powder Coat available by sample approval

| Top Options | | |
|---|---|---|
| Table Link (all four sides) | TLK | $ 241 |
| Table Link (24" ends only) | TLE | $ 129 |
| Special Laminate | TSP | call |
| Custom Cutout (per cutout) | TCC | $ 115 |

**Power + Data Options**

Please reference the Power + Data Price List

| Wire Management Options | | |
|---|---|---|
| 1 Oval Brush Grommet, Provide Location Print | WOG | $ 93 |
| 1 Round Grommet, Provide Location Print | WRG | $ 73 |
| Eliga Wire Manager (each) | WEL | $ 53 |

# Eliga
Rectangle



**Questions?**
800 876 2120

| | | | | | | | | |
|---|---|---|---|---|---|---|---|---|
| | | | top › | Laminate PVC | Laminate Wood | Laminate 1 ¼" Wood | Veneer Wood | Veneer 1 ¼" Wood |
| | | | edge › | Flat | Flat | Square | Flat | Square |
| | | | | | | | | |
| | | | edge ordering code (square corner) › | **LP7S** | **LW7S** | **LWS7** | **VW7S** | **VWS7** |
| | | | top thickness › | 1" | 1" | 1" | 1" | 1" |
| | | | top thickness price › | 1" | 1" | 1" | 1" | 1" |
| **Base Style** | **Table Description** | **Model #** | **Product Wt** | | | | | |
| E1 | 30 x 48 Fix | **EGE1 3048REFX** | 63 | 1388 | 1993 | 2596 | 3087 | 3316 |
| | 30 x 48 Fix w/FixMod | **EGE1 3048REFX XM** | 78 | 1776 | 2378 | 2985 | 3478 | 3705 |
| | 30 x 60 Fix | **EGE1 3060REFX** | 76 | 1518 | 2218 | 2914 | 3819 | 4120 |
| | 30 x 60 Fix w/FixMod | **EGE1 3060REFX XM** | 91 | 1905 | 2603 | 3300 | 4206 | 4507 |
| | 30 x 72 Fix | **EGE1 3072REFX** | 89 | 1705 | 2494 | 3288 | 4335 | 4687 |
| | 30 x 72 Fix w/FixMod | **EGE1 3072REFX XM** | 104 | 2249 | 3037 | 3830 | 4876 | 5229 |
| | 30 x 84 Fix | **EGE1 3084REFX** | 102 | 2039 | 2922 | 3806 | 4880 | 5285 |
| | 30 x 84 Fix w/FixMod | **EGE1 3084REFX XM** | 117 | 2582 | 3464 | 4350 | 5423 | 5828 |
| | 30 x 96 Fix | **EGE1 3096REFX** | 115 | 2101 | 3079 | 4055 | 5470 | 5927 |
| | 30 x 96 Fix w/FixMod | **EGE1 3096REFX XM** | 130 | 2643 | 3621 | 4598 | 6014 | 6472 |

**To Order, Specify...**
1. Model Number
2. Top Material
3. Edge Style and Thickness
4. Edge Color
5. Base Color
6. Additional Options

| Base Options | Code | Price |
|---|---|---|
| Alternate Table Height 32" & Under | BAH | $ 188 |
| Alternate Table Height 32" & Over | BSP | call |
| Casters (4), Dual Wheel Black Hard Wheel (to 72" length) | CAS50 | $ 164 |

| Finish Options | |
|---|---|
| Chrome | $ 624 |
| Nickel | $ 682 |
| Powder Coat, Standard | n/c |
| Powder Coat, Premium | $ 158 |
| Platinum | $ 469 |

Transparent Powder Coat available by sample approval

| Top Options | | |
|---|---|---|
| Table Link (all four sides) | TLK | $ 241 |
| Table Link (30" ends only) | TLE | $ 129 |
| Special Laminate | TSP | call |
| Custom Cutout (per cutout) | TCC | $ 115 |

**Power + Data Options**

Please reference the Power + Data Price List

| Wire Management Options | | |
|---|---|---|
| 1 Oval Brush Grommet, Provide Location Print | WOG | $ 93 |
| 1 Round Grommet, Provide Location Print | WRG | $ 73 |
| Eliga Wire Manager (each) | WEL | $ 53 |

# Eliga
Rectangle
Sliding



**Questions?**
800 876 2120

| | | | | | | | | |
|---|---|---|---|---|---|---|---|---|
| | | | top › | Laminate PVC | Laminate Wood | Laminate 1 ¼" Wood | Veneer Wood | Veneer 1 ¼" Wood |
| | | | edge › | Flat | Flat | Square | Flat | Square |
| | | | edge ordering code (square corner) › | **LP7S** | **LW7S** | **LWS7** | **VW7S** | **VWS7** |
| | | | top thickness › | 1" | 1" | 1" | 1" | 1" |
| | | | top thickness price › | 1" | 1" | 1" | 1" | 1" |
| **Base Style** | **Table Description** | **Model #** | **Product Wt** | | | | | |
| E2 | 24 x 48 Fix w/FixMod | **EGE2 2448REFX XM** | 82 | 2494 | 3240 | 4116 | 3448 | 4135 |
| | 24 x 60 Fix w/FixMod | **EGE2 2460REFX XM** | 96 | 2779 | 3612 | 4583 | 4083 | 4899 |
| | 24 x 72 Fix w/FixMod | **EGE2 2472REFX XM** | 107 | 2990 | 3887 | 4931 | 4539 | 5444 |
| | 30 x 48 Fix w/FixMod | **EGE2 3048REFX XM** | 97 | 2572 | 3343 | 4242 | 4066 | 4878 |
| | 30 x 60 Fix w/FixMod | **EGE2 3060REFX XM** | 112 | 2808 | 3652 | 4634 | 4882 | 5861 |
| | 30 x 72 Fix w/FixMod | **EGE2 3072REFX XM** | 126 | 3084 | 4010 | 5089 | 5474 | 6569 |

**To Order, Specify...**
1. Model Number
2. Top Material
3. Edge Style and Thickness
4. Edge Color
5. Base Color
6. Additional Options

| Base Options | Code | Price |
|---|---|---|
| Casters (4), Dual Wheel Black Hard Wheel (to 72" length) | CAS50 | $ 164 |

**Finish Options**

| | | |
|---|---|---|
| Chrome | | $ 624 |
| Nickel | | $ 682 |
| Powder Coat, Standard | | n/c |
| Powder Coat, Premium | | $ 158 |
| Platinum | | $ 469 |

Transparent Powder Coat available by sample approval

**Top Options**

| | | |
|---|---|---|
| Table Link (24" ends only) | TLE | $ 129 |
| Special Laminate | TSP | call |
| Custom Cutout (per cutout) | TCC | $ 115 |

**Power + Data Options**

| | | |
|---|---|---|
| Eliga Power (specify location) located in frame, not on table top (each) | EG1 | $ 469 |
| Power Infeed (each) | HNPU | $ 432 |

**Wire Management Options**

| | | |
|---|---|---|
| Eliga Wire Manager (each) | WEL | $ 53 |

# Eliga
Rectangle
Gathering



**Questions?**
800 876 2120

| | | | | | | | | |
|---|---|---|---|---|---|---|---|---|
| | | | top › | Laminate PVC | Laminate Wood | Laminate 1 ¼" Wood | Veneer Wood | Veneer 1 ¼" Wood |
| | | | edge › | Flat | Flat | Square | Flat | Square |
| | | | | | | | | |
| | | | edge ordering code (square corner) › | **LP7S** | **LW7S** | **LWS7** | **VW7S** | **VWS7** |
| | | | top thickness › | 1" | 1" | 1" | 1" | 1" |
| | | | top thickness price › | 1" | 1" | 1" | 1" | 1" |
| **Base Style** | **Table Description** | **Model #** | **Product Wt** | | | | | |
| E6S | 42 x 72 Fix | **EGE6S 4272REFX** | 138 | 2969 | 3819 | 4669 | 5742 | 6149 |
| E5S | 42 x 84 Fix | **EGE5S 4284REFX** | 213 | 3415 | 4355 | 5294 | 6327 | 6786 |
| | 42 x 96 Fix | **EGE5S 4296REFX** | 233 | 3482 | 4512 | 5540 | 6959 | 7480 |
| | 48 x 60 Fix | **EGE5S 4860REFX** | 172 | 2420 | 3225 | 4030 | 5133 | 5512 |
| | 48 x 72 Fix | **EGE5S 4872REFX** | 194 | 2688 | 3583 | 4475 | 5887 | 6336 |
| | 48 x 84 Fix | **EGE5S 4884REFX** | 216 | 3093 | 4079 | 5063 | 6536 | 7053 |
| | 48 x 96 Fix | **EGE5S 4896REFX** | 252 | 3524 | 4598 | 5669 | 7591 | 8176 |
| | 48 x 120 Fix | **EGE5S 48120REFX** | 366 | 5450 | 6703 | 7957 | 11756 | 12597 |
| | 48 x 144 Fix | **EGE5S 48144REFX** | 422 | 5976 | 7407 | 8838 | 14015 | 15076 |
| | 48 x 192 Fix | **EGE5S48192REFX** | 515 | 6924 | 8711 | 10503 | 16790 | 18115 |
| | 60 x 72 Fix | **EGE5S 6072REFX** | 229 | 3150 | 4276 | 5639 | 7176 | 7744 |
| | 60 x 84 Fix | **EGE5S 6084REFX** | 251 | 3561 | 4747 | 6351 | 7704 | 8325 |
| | 60 x 96 Fix | **EGE5S 6096REFX** | 273 | 3651 | 4940 | 6097 | 8534 | 9234 |
| | 60 x 120 Fix | **EGE5S 60120REFX** | 411 | 5719 | 7061 | 8403 | 13073 | 14044 |
| | 60 x 144 Fix | **EGE5S 60144REFX** | 475 | 6322 | 7844 | 9363 | 15902 | 17150 |
| | 60 x 192 Fix | **EGE5S 60192REFX** | 584 | 7376 | 9256 | 11135 | 19319 | 20895 |
| | 60 x 240 Fix | **EGE5S 60240REFX** | 685 | 8827 | 11063 | 13300 | 23029 | 24902 |

E6S/E5S
Standard Height (42")

**To Order, Specify...**
1. Model Number
2. Top Material
3. Edge Style and Thickness
4. Edge Color
5. Base Color
6. Additional Options

| Finish Options | Code | Price |
|---|---|---|
| Chrome | | $ 624 |
| Nickel | | $ 682 |
| Powder Coat, Standard | | n/c |
| Powder Coat, Premium | | $ 158 |
| Platinum | | $ 469 |

Transparent Powder Coat available by sample approval

| Top Options | | |
|---|---|---|
| Special Laminate | TSP | call |
| Custom Cutout (per cutout) | TCC | $ 115 |

**Power + Data Options**

Please reference the Power + Data Price List

| Wire Management Options | | |
|---|---|---|
| 1 Oval Brush Grommet, Provide Location Print | WOG | $ 93 |
| 1 Round Grommet, Provide Location Print | WRG | $ 73 |
| Eliga Wire Manager (each) | WEL | $ 53 |

**Questions?**
800 876 2120

| | | | top › | Laminate | Laminate | Laminate | Veneer | Veneer |
|---|---|---|---|---|---|---|---|---|
| | | | edge › | PVC | Wood | 1 ¼" Wood | Wood | 1 ¼" Wood |
| | | | | Flat | Flat | Square | Flat | Square |
| | | | edge ordering code › | **LP7R** | **LW7R** | **LWS7** | **VW7R** | **VWS7** |
| | | | top thickness › | 1" | 1" | 1" | 1" | 1" |
| | | | top thickness price › | 1" | 1" | 1" | 1" | 1" |
| **Base Style** | **Table Description** | **Model #** | **Product Wt** | | | | | |
| E5S Standard Height (42") | 42 x 84 Fix | **EGE5S 4284RAFX** | 175 | 3762 | 4700 | 5642 | 6488 | 6965 |
| | 42 x 96 Fix | **EGE5S 4296RAFX** | 192 | 3846 | 4874 | 5904 | 7109 | 7645 |
| | 48 x 96 Fix | **EGE5S 4896RAFX** | 221 | 3894 | 4967 | 6041 | 7776 | 8381 |
| | 48 x 120 Fix | **EGE5S 48120RAFX** | 266 | 5904 | 7155 | 8410 | 11952 | 12812 |
| | 48 x 144 Fix | **EGE5S 48144RAFX** | 390 | 6541 | 7972 | 9406 | 14327 | 15418 |
| | 60 x 144 Fix | **EGE5S 60144RAFX** | 434 | 6954 | 8476 | 9995 | 15925 | 17172 |
| | 60 x 192 Fix | **EGE5S 60192RAFX** | 540 | 8146 | 10024 | 11904 | 19319 | 20895 |
| | 60 x 240 Fix | **EGE5S 60240RAFX** | 643 | 9741 | 11977 | 14213 | 23149 | 25032 |

**To Order, Specify...**
1. Model Number
2. Top Material
3. Edge Style and Thickness
4. Edge Color
5. Base Color
6. Additional Options

| Finish Options | Code | Price |
|---|---|---|
| Chrome | | $ 624 |
| Nickel | | $ 682 |
| Powder Coat, Standard | | n/c |
| Powder Coat, Premium | | $ 158 |
| Platinum | | $ 469 |

Transparent Powder Coat available by sample approval

| Top Options | | |
|---|---|---|
| Special Laminate | TSP | call |
| Custom Cutout (per cutout) | TCC | $ 115 |

**Power + Data Options**

Please reference the Power + Data Price List

| Wire Management Options | | |
|---|---|---|
| 1 Oval Brush Grommet, Provide Location Print | WOG | $ 93 |
| 1 Round Grommet, Provide Location Print | WRG | $ 73 |
| Eliga Wire Manager (each) | WEL | $ 53 |

# Eliga
## Boat + Arc Boat Gathering

VERSTEEL

**Questions?**
800 876 2120

| | | | top › | Laminate PVC | Laminate Wood | Laminate 1 ¼" Wood | Veneer Wood | Veneer 1 ¼" Wood |
|---|---|---|---|---|---|---|---|---|
| | | | edge › | Flat | Flat | Square | Flat | Square |
| | | | edge ordering code › | **LP7R** | **LW7R** | **LWS7** | **VW7R** | **VWS7** |
| | | | top thickness › | 1" | 1" | 1" | 1" | 1" |
| | | | top thickness price › | 1" | 1" | 1" | 1" | 1" |
| **Base Style** | **Table Description** | **Model #** | **Product Wt** | | | | | |
| | **Boat** | | | | | | | |
| | 42 x 48 x 96 Fix | **EGE5S 4296BTFX** | 242 | 3981 | 5058 | 6131 | 7844 | 8451 |
| | 42 x 48 x 120 Fix | **EGE5S 42120BTFX** | 364 | 6004 | 7256 | 8511 | 12059 | 12928 |
| E5S Standard Height (42") | 42 x 48 x 144 Fix | **EGE5S 42144BTFX** | 409 | 6673 | 8106 | 9536 | 14313 | 15405 |
| | 48 x 60 x 192 Fix | **EGE5S 48192BTFX** | 557 | 8522 | 10400 | 12282 | 17382 | 18764 |
| | 48 x 60 x 240 Fix | **EGE5S 48240BTFX** | 652 | 10188 | 12424 | 14661 | 23883 | 25837 |
| | **Arc Boat** | | | | | | | |
| | 42 x 48 x 96 Fix | **EGE5S 4296ABFX** | 239 | 3981 | 5058 | 6131 | 7837 | 8445 |
| | 42 x 48 x 120 Fix | **EGE5S 42120ABFX** | 349 | 6004 | 7256 | 8511 | 11874 | 12726 |
| | 42 x 48 x 144 Fix | **EGE5S 42144ABFX** | 404 | 6673 | 8106 | 9536 | 14035 | 15096 |
| | 48 x 60 x 192 Fix | **EGE5S 48192ABFX** | 543 | 8522 | 10400 | 12282 | 19557 | 21158 |
| | 48 x 60 x 240 Fix | **EGE5S 48240ABFX** | 647 | 10188 | 12424 | 14661 | 23517 | 25439 |

**To Order, Specify...**
1. Model Number
2. Top Material
3. Edge Style and Thickness
4. Edge Color
5. Base Color
6. Additional Options

| Finish Options | Code | Price |
|---|---|---|
| Chrome | | $ 624 |
| Nickel | | $ 682 |
| Powder Coat, Standard | | n/c |
| Powder Coat, Premium | | $ 158 |
| Platinum | | $ 469 |

Transparent Powder Coat available by sample approval

| Top Options | | |
|---|---|---|
| Special Laminate | TSP | call |
| Custom Cutout (per cutout) | TCC | $ 115 |

**Power + Data Options**

Please reference the Power + Data Price List

| Wire Management Options | | |
|---|---|---|
| 1 Oval Brush Grommet, Provide Location Print | WOG | $ 93 |
| 1 Round Grommet, Provide Location Print | WRG | $ 73 |
| Eliga Wire Manager (each) | WEL | $ 53 |

# Eliga
Rectangle
Conference



**Questions?**
800 876 2120

| | | | top › | Laminate PVC | Laminate Wood | Laminate 1 ¼" Wood | Veneer Wood | Veneer 1 ¼" Wood |
|---|---|---|---|---|---|---|---|---|
| | | | edge › | Flat | Flat | Square | Flat | Square |
| | | | | | | | | |
| | | | edge ordering code (square corner) › | **LP7S** | **LW7S** | **LWS7** | **VW7S** | **VWS7** |
| | | | top thickness › | 1" | 1" | 1" | 1" | 1" |
| | | | top thickness price › | 1" | 1" | 1" | 1" | 1" |
| **Base Style** | **Table Description** | **Model #** | **Product Wt** | | | | | |
| E6 | 42 x 72 Fix | **EGE6 4272REFX** | 128 | 2885 | 3736 | 4584 | 5660 | 6064 |
| E5 | 42 x 84 Fix | **EGE5 4284REFX** | 203 | 3334 | 4273 | 5211 | 6243 | 6704 |
| E6/E5 Standard Height (29") | 42 x 96 Fix | **EGE5 4296REFX** | 242 | 3400 | 4427 | 5457 | 6876 | 7397 |
| | 48 x 96 Fix | **EGE5 4896REFX** | 252 | 3439 | 4515 | 5587 | 7508 | 8094 |
| | 48 x 120 Fix | **EGE5 48120REFX** | 346 | 5246 | 6500 | 7752 | 11551 | 12392 |
| | 48 x 144 Fix | **EGE5 48144REFX** | 402 | 5843 | 7276 | 8707 | 13886 | 14945 |
| | 48 x 192 Fix | **EGE5 48192REFX** | 495 | 6698 | 8487 | 10276 | 16564 | 17887 |
| | 60 x 120 Fix | **EGE5 60120REFX** | 391 | 5683 | 7025 | 8367 | 13038 | 14009 |
| | 60 x 144 Fix | **EGE5 60144REFX** | 455 | 6287 | 7808 | 9329 | 15865 | 17113 |
| | 60 x 192 Fix | **EGE5 60192REFX** | 564 | 7270 | 9148 | 11028 | 19212 | 20788 |
| | 60 x 240 Fix | **EGE5 60240REFX** | 665 | 8741 | 10979 | 13216 | 22945 | 24817 |

**To Order, Specify...**
1. Model Number
2. Top Material
3. Edge Style and Thickness
4. Edge Color
5. Base Color
6. Additional Options

| Finish Options | Code | Price |
|---|---|---|
| Chrome | | $ 624 |
| Nickel | | $ 682 |
| Powder Coat, Standard | | n/c |
| Powder Coat, Premium | | $ 158 |
| Platinum | | $ 469 |

Transparent Powder Coat available by sample approval

| Top Options | | |
|---|---|---|
| Special Laminate | TSP | call |
| Custom Cutout (per cutout) | TCC | $ 115 |

**Power + Data Options**

Please reference the Power + Data Price List

| Wire Management Options | | |
|---|---|---|
| 1 Oval Brush Grommet, Provide Location Print | WOG | $ 93 |
| 1 Round Grommet, Provide Location Print | WRG | $ 73 |
| Eliga Wire Manager (each) | WEL | $ 53 |

# Eliga
Racetrack
Conference



**Questions?**
800 876 2120

| | | | top › | Laminate PVC | Laminate Wood | Laminate 1 ¼" Wood | Veneer Wood | Veneer 1 ¼" Wood |
|---|---|---|---|---|---|---|---|---|
| | | | edge › | Flat | Flat | Square | Flat | Square |
| | | | | | | | | |
| | | | edge ordering code › | **LP7R** | **LW7R** | **LWS7** | **VW7R** | **VWS7** |
| | | | top thickness › | 1" | 1" | 1" | 1" | 1" |
| | | | top thickness price › | 1" | 1" | 1" | 1" | 1" |
| **Base Style** | **Table Description** | **Model #** | **Product Wt** | | | | | |
| E5 Standard Height (29") | 42 x 84 Fix | **EGE5 4284RAFX** | 165 | 3679 | 4618 | 5557 | 6406 | 6881 |
| | 42 x 96 Fix | **EGE5 4296RAFX** | 182 | 3762 | 4792 | 5818 | 7025 | 7561 |
| | 48 x 96 Fix | **EGE5 4896RAFX** | 211 | 3810 | 4884 | 5956 | 7694 | 8295 |
| | 48 x 120 Fix | **EGE5 48120RAFX** | 256 | 5818 | 7072 | 8325 | 11870 | 12727 |
| | 48 x 144 Fix | **EGE5 48144RAFX** | 370 | 6435 | 7866 | 9299 | 14219 | 15310 |

**To Order, Specify...**
1. Model Number
2. Top Material
3. Edge Style and Thickness
4. Edge Color
5. Base Color
6. Additional Options

| Finish Options | Code | Price |
|---|---|---|
| Chrome | | $ 624 |
| Nickel | | $ 682 |
| Powder Coat, Standard | | n/c |
| Powder Coat, Premium | | $ 158 |
| Platinum | | $ 469 |

Transparent Powder Coat available by sample approval

| Top Options | | |
|---|---|---|
| Special Laminate | TSP | call |
| Custom Cutout (per cutout) | TCC | $ 115 |

**Power + Data Options**

Please reference the Power + Data Price List

| Wire Management Options | | |
|---|---|---|
| 1 Oval Brush Grommet, Provide Location Print | WOG | $ 93 |
| 1 Round Grommet, Provide Location Print | WRG | $ 73 |
| Eliga Wire Manager (each) | WEL | $ 53 |

# Eliga
## Boat + Arc Boat Conference

VERSTEEL

**Questions?**
800 876 2120

| | | | top › | Laminate PVC | Laminate Wood | Laminate 1 ¼" Wood | Veneer Wood | Veneer 1 ¼" Wood |
|---|---|---|---|---|---|---|---|---|
| | | | edge › | Flat | Flat | Square | Flat | Square |
| | | | | | | | | |
| | | | edge ordering code › | **LP7R** | **LW7R** | **LWS7** | **VW7R** | **VWS7** |
| | | | top thickness › | 1" | 1" | 1" | 1" | 1" |
| | | | top thickness price › | 1" | 1" | 1" | 1" | 1" |
| **Base Style** | **Table Description** | **Model #** | **Product Wt** | | | | | |
| | **Boat** | | | | | | | |
| | 42 x 48 x 96 Fix | **EGE5 4296BTFX** | 233 | 3899 | 4974 | 6048 | 7759 | 8367 |
| | 42 x 48 x 120 Fix | **EGE5 42120BTFX** | 334 | 5921 | 7175 | 8427 | 11977 | 12846 |
| E5 Standard Height (29") | 42 x 48 x 144 Fix | **EGE5 42144BTFX** | 389 | 6565 | 7997 | 9429 | 14208 | 15297 |
| | 48 x 60 x 192 Fix | **EGE5 48192BTFX** | 537 | 8415 | 10293 | 12173 | 17274 | 18655 |
| | 48 x 60 x 240 Fix | **EGE5 48240BTFX** | 632 | 10102 | 12341 | 14577 | 23798 | 25753 |
| | **Arc Boat** | | | | | | | |
| | 42 x 48 x 96 Fix | **EGE5 4296ABFX** | 229 | 3899 | 4974 | 6048 | 7752 | 8363 |
| | 42 x 48 x 120 Fix | **EGE5 42120ABFX** | 329 | 5921 | 7175 | 8427 | 11792 | 12641 |
| | 42 x 48 x 144 Fix | **EGE5 42144ABFX** | 384 | 6565 | 7997 | 9429 | 13928 | 14988 |
| | 48 x 60 x 192 Fix | **EGE5 48192ABFX** | 523 | 8415 | 10293 | 12173 | 19452 | 21050 |
| | 48 x 60 x 240 Fix | **EGE5 48240ABFX** | 627 | 10102 | 12341 | 14577 | 23435 | 25354 |

**To Order, Specify...**
1. Model Number
2. Top Material
3. Edge Style and Thickness
4. Edge Color
5. Base Color
6. Additional Options

| Finish Options | Code | Price |
|---|---|---|
| Chrome | | $ 624 |
| Nickel | | $ 682 |
| Powder Coat, Standard | | n/c |
| Powder Coat, Premium | | $ 158 |
| Platinum | | $ 469 |

Transparent Powder Coat available by sample approval

| Top Options | | |
|---|---|---|
| Special Laminate | TSP | call |
| Custom Cutout (per cutout) | TCC | $ 115 |

**Power + Data Options**

Please reference the Power + Data Price List

| Wire Management Options | | |
|---|---|---|
| 1 Oval Brush Grommet, Provide Location Print | WOG | $ 93 |
| 1 Round Grommet, Provide Location Print | WRG | $ 73 |
| Eliga Wire Manager (each) | WEL | $ 53 |

# Eliga
Collaborative D
4-Leg



**Questions?**
800 876 2120

❹ Indicates Number of Bases

| | | | | | | | | |
|---|---|---|---|---|---|---|---|---|
| | | | top › | Laminate PVC | Laminate Wood | Laminate 1 ¼" Wood | Veneer Wood | Veneer 1 ¼" Wood |
| | | | edge › | Flat | Flat | Square | Flat | Square |
| | | | | | | | | |
| | | | edge ordering code (square corner) › | **LP7S** | **LW7S** | **LWS7** | **VW7S** | **VWS7** |
| | | | top thickness › | 1" | 1" | 1" | 1" | 1" |
| | | | top thickness price › | 1" | 1" | 1" | 1" | 1" |
| **Base Style** | **Table Description** | **Model #** | **Product Wt** | | | | | |
| E7 Standard Height (29") | 48 x 72 Fix | **EGE7 4872CDFX ❹** | 183 | 3047 | 3947 | 5122 | 6004 | 6440 |
| | 48 x 84 Fix | **EGE7 4884CDFX ❹** | 207 | 3536 | 4717 | 6255 | 6673 | 7168 |
| | 48 x 96 Fix | **EGE7 4896CDFX ❹** | 220 | 3660 | 4884 | 6483 | 7389 | 7950 |
| | 60 x 72 Fix | **EGE7 6072CDFX ❹** | 223 | 3452 | 4591 | 6076 | 7007 | 7538 |
| | 60 x 84 Fix | **EGE7 6084CDFX ❹** | 254 | 3906 | 5300 | 7120 | 7823 | 8433 |
| | 60 x 96 Fix | **EGE7 6096CDFX ❹** | 284 | 4030 | 5469 | 7341 | 8696 | 9387 |

**To Order, Specify...**
1. Model Number
2. Top Material
3. Edge Style and Thickness
4. Edge Color
5. Base Color
6. Additional Options

| Finish Options | Code | Price |
|---|---|---|
| Chrome | | $ 624 |
| Nickel | | $ 682 |
| Powder Coat, Standard | | n/c |
| Powder Coat, Premium | | $ 158 |
| Platinum | | $ 469 |

Transparent Powder Coat available by sample approval

| Top Options | | |
|---|---|---|
| Special Laminate | TSP | call |
| Custom Cutout (per cutout) | TCC | $ 115 |

**Power + Data Options**

Please reference the Power + Data Price List

| Wire Management Options | | |
|---|---|---|
| 1 Oval Brush Grommet, Provide Location Print | WOG | $ 93 |
| 1 Round Grommet, Provide Location Print | WRG | $ 73 |
| Eliga Wire Manager (each) | WEL | $ 53 |

# Eliga
Collaborative D
2-Leg



**Questions?**
800 876 2120

❷ Indicates Number of Bases

| | | | | | | | | |
|---|---|---|---|---|---|---|---|---|
| | | | top › | Laminate PVC | Laminate Wood | Laminate 1 ¼" Wood | Veneer Wood | Veneer 1 ¼" Wood |
| | | | edge › | Flat | Flat | Square | Flat | Square |
| | | | | | | | | |
| | | | edge ordering code (square corner) › | **LP7S** | **LW7S** | **LWS7** | **VW7S** | **VWS7** |
| | | | top thickness › | 1" | 1" | 1" | 1" | 1" |
| | | | top thickness price › | 1" | 1" | 1" | 1" | 1" |
| **Base Style** | **Table Description** | **Model #** | **Product Wt** | | | | | |
| E8 Standard Height (29") | 48 x 72 Fix | **EGE8 4872CDFX ❷** | 183 | 2807 | 3709 | 4884 | 5765 | 6202 |
| | 48 x 84 Fix | **EGE8 4884CDFX ❷** | 207 | 3296 | 4475 | 6017 | 6435 | 6929 |
| | 48 x 96 Fix | **EGE8 4896CDFX ❷** | 220 | 3423 | 4644 | 6243 | 7150 | 7711 |
| | 60 x 72 Fix | **EGE8 6072CDFX ❷** | 223 | 3214 | 4353 | 5838 | 6769 | 7300 |
| | 60 x 84 Fix | **EGE8 6084CDFX ❷** | 254 | 3666 | 5063 | 6881 | 7587 | 8192 |
| | 60 x 96 Fix | **EGE8 6096CDFX ❷** | 284 | 3792 | 5231 | 7101 | 8456 | 9148 |

**Note:** Table includes wall mount brackets.

**To Order, Specify...**
1. Model Number
2. Top Material
3. Edge Style and Thickness
4. Edge Color
5. Base Color
6. Additional Options

| Finish Options | Code | Price |
|---|---|---|
| Chrome | | $ 624 |
| Nickel | | $ 682 |
| Powder Coat, Standard | | n/c |
| Powder Coat, Premium | | $ 158 |
| Platinum | | $ 469 |

Transparent Powder Coat available by sample approval

| Top Options | | |
|---|---|---|
| Special Laminate | TSP | call |
| Custom Cutout (per cutout) | TCC | $ 115 |

**Power + Data Options**

Please reference the Power + Data Price List

| Wire Management Options | | |
|---|---|---|
| 1 Oval Brush Grommet, Provide Location Print | WOG | $ 93 |
| 1 Round Grommet, Provide Location Print | WRG | $ 73 |
| Eliga Wire Manager (each) | WEL | $ 53 |

# Eliga
Rectangle
End-Sit



**Questions?**
800 876 2120

| | | | | | | | | |
|---|---|---|---|---|---|---|---|---|
| | | | top › | Laminate PVC | Laminate Wood | Laminate 1 ¼" Wood | Veneer Wood | Veneer 1 ¼" Wood |
| | | | edge › | Flat | Flat | Square | Flat | Square |
| | | | edge ordering code (square corner) › | **LP7S** | **LW7S** | **LWS7** | **VW7S** | **VWS7** |
| | | | top thickness › | 1" | 1" | 1" | 1" | 1" |
| | | | top thickness price › | 1" | 1" | 1" | 1" | 1" |
| **Base Style** | **Table Description** | **Model #** | **Product Wt** | | | | | |
| TE | 24 x 48 Fix | **EGTE 2448REFX** | 55 | 1199 | 1631 | 1880 | 2474 | 2622 |
| | 24 x 48 Slim-Tilt | **EGTE 2448REST** | 64 | 1699 | 2131 | 2373 | 2919 | 3114 |
| | 24 x 60 Fix | **EGTE 2460REFX** | 63 | 1280 | 1749 | 2097 | 2673 | 2896 |
| | 24 x 60 Slim-Tilt | **EGTE 2460REST** | 75 | 1777 | 2131 | 2673 | 3164 | 3387 |
| | 24 x 72 Fix | **EGTE 2472REFX** | 70 | 1469 | 2051 | 2363 | 2896 | 3142 |
| | 24 x 72 Slim-Tilt | **EGTE 2472REST** | 85 | 1962 | 2552 | 2853 | 3387 | 3634 |
| | 24 x 84 Fix | **EGTE 2484REFX** | 94 | 1549 | 2273 | 2673 | 3175 | 3456 |
| | 24 x 84 Slim-Tilt | **EGTE 2484REST** | 97 | 2046 | 2771 | 3164 | 3666 | 3947 |
| | 24 x 90 Fix | **EGTE 2490REFX** | 100 | 1675 | 2468 | 2911 | 3459 | 3763 |
| | 24 x 90 Slim-Tilt | **EGTE 2490REST** | 103 | 2181 | 2945 | 3404 | 3978 | 4251 |
| | 24 x 96 Fix | **EGTE 2496REFX** | 105 | 1790 | 2621 | 3107 | 3563 | 3874 |
| | 24 x 96 Slim-Tilt | **EGTE 2496REST** | 109 | 2286 | 3121 | 3600 | 4050 | 4368 |

**To Order, Specify...**
1. Model Number
2. Top Material
3. Edge Style and Thickness
4. Edge Color
5. Base Color
6. Additional Options

| Base Options | Code | Price |
|---|---|---|
| Casters (4), Dual Wheel Black Hard Wheel (to 72" length) | CAS55 | $ 164 |
| Casters (4), Dual Wheel Black Soft Wheel (to 72" length) | CAS57 | $ 164 |

| Finish Options | |
|---|---|
| Chrome | $ 624 |
| Nickel | $ 682 |
| Powder Coat, Standard | n/c |
| Powder Coat, Premium | $ 158 |
| Platinum | $ 469 |

| Top Options | | |
|---|---|---|
| Table Link (all four sides) | TLK | $ 241 |
| Special Laminate | TSP | call |
| Custom Cutout (per cutout) | TCC | $ 115 |

**Power + Data Options**

Please reference the Power + Data Price List

| Wire Management Options | | |
|---|---|---|
| 1 Oval Brush Grommet, Location A | WOA | $ 93 |
| 2 Oval Brush Grommets, Location E | WOE | $ 186 |
| 1 Oval Brush Grommet, Provide Location Print | WOG | $ 93 |
| 1 Round Grommet, Location A | WRA | $ 73 |
| 2 Round Grommets, Location E | WRE | $ 146 |
| 1 Round Grommet, Provide Location Print | WRG | $ 73 |

# Eliga
Rectangle
End-Sit



**Questions?**
800 876 2120

| | | | top › | Laminate PVC | Laminate Wood | Laminate 1 ¼" Wood | Veneer Wood | Veneer 1 ¼" Wood |
|---|---|---|---|---|---|---|---|---|
| | | | edge › | Flat | Flat | Square | Flat | Square |
| | | | | | | | | |
| | | | edge ordering code (square corner) › | **LP7S** | **LW7S** | **LWS7** | **VW7S** | **VWS7** |
| | | | top thickness › | 1" | 1" | 1" | 1" | 1" |
| | | | top thickness price › | 1" | 1" | 1" | 1" | 1" |
| **Base Style** | **Table Description** | **Model #** | **Product Wt** | | | | | |
| TE | 30 x 48 Fix | **EGTE 3048REFX** | 63 | 1322 | 1775 | 1990 | 2675 | 2897 |
| | 30 x 48 Slim-Tilt | **EGTE 3048REST** | 75 | 1822 | 2273 | 2481 | 3167 | 3389 |
| | 30 x 60 Fix | **EGTE 3060REFX** | 73 | 1403 | 1985 | 2285 | 3093 | 3200 |
| | 30 x 60 Slim-Tilt | **EGTE 3060REST** | 87 | 1901 | 2481 | 2774 | 3437 | 3689 |
| | 30 x 72 Fix | **EGTE 3072REFX** | 83 | 1512 | 2195 | 2561 | 3275 | 3567 |
| | 30 x 72 Slim-Tilt | **EGTE 3072REST** | 100 | 2005 | 2690 | 3052 | 3769 | 4059 |
| | 30 x 84 Fix | **EGTE 3084REFX** | 109 | 1622 | 2476 | 3056 | 3573 | 3895 |
| | 30 x 84 Slim-Tilt | **EGTE 3084REST** | 114 | 2117 | 2973 | 3405 | 4061 | 4384 |
| | 30 x 90 Fix | **EGTE 3090REFX** | 116 | 1730 | 2673 | 3178 | 3890 | 4245 |
| | 30 x 90 Slim-Tilt | **EGTE 3090REST** | 121 | 2220 | 3113 | 3666 | 4376 | 4723 |
| | 30 x 96 Fix | **EGTE 3096REFX** | 122 | 1821 | 2839 | 3382 | 3993 | 4361 |
| | 30 x 96 Slim-Tilt | **EGTE 3096REST** | 128 | 2319 | 3338 | 3874 | 4485 | 4854 |

**To Order, Specify...**
1. Model Number
2. Top Material
3. Edge Style and Thickness
4. Edge Color
5. Base Color
6. Additional Options

| Base Options | Code | Price |
|---|---|---|
| Casters (4), Dual Wheel Black Hard Wheel (to 72" length) | CAS55 | $ 164 |
| Casters (4), Dual Wheel Black Soft Wheel (to 72" length) | CAS57 | $ 164 |

| Finish Options | |
|---|---|
| Chrome | $ 624 |
| Nickel | $ 682 |
| Powder Coat, Standard | n/c |
| Powder Coat, Premium | $ 158 |
| Platinum | $ 469 |

| Top Options | | |
|---|---|---|
| Table Link (all four sides) | TLK | $ 241 |
| Special Laminate | TSP | call |
| Custom Cutout (per cutout) | TCC | $ 115 |

**Power + Data Options**

Please reference the Power + Data Price List

| Wire Management Options | | |
|---|---|---|
| 1 Oval Brush Grommet, Location A | WOA | $ 93 |
| 2 Oval Brush Grommets, Location E | WOE | $ 186 |
| 1 Oval Brush Grommet, Provide Location Print | WOG | $ 93 |
| 1 Round Grommet, Location A | WRA | $ 73 |
| 2 Round Grommets, Location E | WRE | $ 146 |
| 1 Round Grommet, Provide Location Print | WRG | $ 73 |

# Eliga
## Whiteboard

VERSTEEL

**Questions?**

800 876 2120

**Finish Options**

| | |
|---|---|
| Powder Coat, Standard | n/c |
| Powder Coat, Premium | $ 158 |
| Platinum | $ 469 |

Transparent Powder Coats available by sample approval

| | Description | Model # | Product Wt | Price |
|---|---|---|---|---|
| 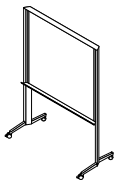 | 21 x 48 x 69 | **EG 4342WB** | 90 | 3576 |

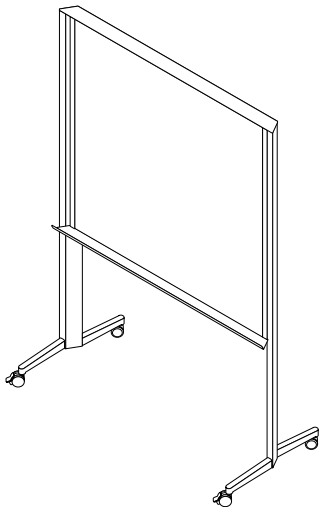

**Features**

Two sided magnetic dry erase writing surface
Dual wheel locking caster only
Integrated storage shelf on each side
Writing surface dimensions: 42" w x 43" h
Overall width: 48"
Overall depth: 21"
Overall height: 69"

**To Order, Specify...**

1. Model Number
2. Frame Color

# Training Tables
## Eliga



**Questions?**
800 876 2120

| | | | top › | Laminate PVC | Laminate Wood |
|---|---|---|---|---|---|
| | | | edge › | Flat | Flat |
| | | | edge ordering code (square corner) › | **LP7S** | **LW7S** |
| | | | top thickness › | 1″ | 1″ |
| | | | top thickness price › | 1″ | 1″ |
| **Base Style** | **Table Description** | **Model #** | **Product Wt** | | |
| T1 | 20 x 48 Fix | **EGT1 2048REFX** | 49 | 1143 | 1462 |
| | 20 x 48 Slim-Tilt | **EGT1 2048REST** | 59 | 1640 | 1962 |
| | 20 x 48 Fix w/FixMod | **EGT1 2048REFX XM** | 62 | 1430 | 1947 |
| | 20 x 48 Fix w/RemMod | **EGT1 2048REFX RM** | 52 | 1452 | 1961 |
| | 20 x 48 Slim-Tilt w/RemMod | **EGT1 2048REST RM** | 62 | 1985 | 2502 |
| | 20 x 48 Slim-Tilt w/HangMod | **EGT1 2048REST HM** | 72 | 1985 | 2502 |
| | 20 x 48 Fix w/FixLightweightFormMod | **EGT1 2048REFX XL** | 61 | 1452 | 1961 |
| | 20 x 48 Fix w/RemLightweightFormMod | **EGT1 2048REFX RL** | 61 | 1452 | 1961 |
| | 20 x 48 Fix w/FixFormMod | **EGT1 2048REFX XF** | 71 | 1567 | 1917 |
| | 20 x 60 Fix | **EGT1 2060REFX** | 55 | 1240 | 1602 |
| | 20 x 60 Slim-Tilt | **EGT1 2060REST** | 67 | 1733 | 2100 |
| | 20 x 60 Fix w/FixMod | **EGT1 2060REFX XM** | 70 | 1650 | 2381 |
| | 20 x 60 Fix w/RemMod | **EGT1 2060REFX RM** | 58 | 1692 | 2428 |
| | 20 x 60 Slim-Tilt w/RemMod | **EGT1 2060REST RM** | 70 | 2193 | 2924 |
| | 20 x 60 Slim-Tilt w/HangMod | **EGT1 2060REST HM** | 82 | 2193 | 2924 |
| | 20 x 60 Fix w/FixLightweightFormMod | **EGT1 2060REFX XL** | 70 | 1692 | 2432 |
| | 20 x 60 Fix w/RemLightweightFormMod | **EGT1 2060REFX RL** | 70 | 1692 | 2432 |
| | 20 x 60 Fix w/FixFormMod | **EGT1 2060REFX XF** | 82 | 1962 | 2329 |
| | 20 x 72 Fix | **EGT1 2072REFX** | 61 | 1296 | 1737 |
| | 20 x 72 Slim-Tilt | **EGT1 2072REST** | 76 | 1792 | 2235 |
| | 20 x 72 Fix w/FixMod | **EGT1 2072REFX XM** | 78 | 1787 | 2904 |
| | 20 x 72 Fix w/RemMod | **EGT1 2072REFX RM** | 65 | 1829 | 2948 |
| | 20 x 72 Slim-Tilt w/RemMod | **EGT1 2072REST RM** | 80 | 2330 | 3448 |
| | 20 x 72 Slim-Tilt w/HangMod | **EGT1 2072REST HM** | 93 | 2330 | 3448 |
| | 20 x 72 Fix w/FixLightweightFormMod | **EGT1 2072REFX XL** | 79 | 1832 | 2952 |
| | 20 x 72 Fix w/RemLightweightFormMod | **EGT1 2072REFX RL** | 79 | 1832 | 2952 |
| | 20 x 72 Fix w/FixFormMod | **EGT1 2072REFX XF** | 93 | 2021 | 2460 |
| | 20 x 84 Fix | **EGT1 2084REFX** | 83 | 1430 | 2044 |
| | 20 x 84 Slim-Tilt | **EGT1 2084REST** | 86 | 1929 | 2541 |
| | 20 x 84 Fix w/FixMod | **EGT1 2084REFX XM** | 103 | 2043 | 3033 |
| | 20 x 84 Fix w/RemMod | **EGT1 2084REFX RM** | 87 | 2070 | 3054 |
| | 20 x 84 Slim-Tilt w/RemMod | **EGT1 2084REST RM** | 90 | 2688 | 4194 |
| | 20 x 84 Slim-Tilt w/HangMod | **EGT1 2084REST HM** | 106 | 2688 | 4194 |

**Note:** Training tables are often used with lightweight computer accessories. For heavy duty applications, such as large scale computer equipment, multiple monitor mounts, etc., Versteel suggests adding a third leg or stretcher. The price of the 84", 90" and 96" models include a stretcher rail required for additional support. Contact Customer Service if you have specific application concerns or questions.

**To Order, Specify...**

1. Model Number
2. Top Material
3. Edge Style and Thickness
4. Edge Color
5. Base Color
6. Additional Options

| Base Options | Code | Price |
|---|---|---|
| Casters (4), Dual Wheel Black Hard Wheel (to 72" length) | CAS55 | $ 164 |
| Casters (4), Dual Wheel Black Soft Wheel (to 72" length) | CAS57 | $ 164 |

| Finish Options | | |
|---|---|---|
| Chrome | | $ 624 |
| Nickel | | $ 682 |
| Powder Coat, Standard | | n/c |
| Powder Coat, Premium | | $ 158 |
| Platinum | | $ 469 |

| Top Options | | |
|---|---|---|
| Table Link (all four sides) | TLK | $ 241 |
| Table Link (20" ends only) | TLE | $ 129 |
| Special Laminate | TSP | call |
| Custom Cutout (per cutout) | TCC | $ 115 |

**Power + Data Options**

Please reference the Power + Data Price List

| Wire Management Options | | |
|---|---|---|
| 1 Oval Brush Grommet, Location A | WOA | $ 93 |
| 2 Oval Brush Grommets, Location E | WOE | $ 186 |
| 1 Oval Brush Grommet, Provide Location Print | WOG | $ 93 |
| 1 Round Grommet, Location A | WRA | $ 73 |
| 2 Round Grommets, Location E | WRE | $ 146 |
| 1 Round Grommet, Provide Location Print | WRG | $ 73 |

# Training Tables
## Eliga



**Questions?**
800 876 2120

| | | | top › | Laminate PVC | Laminate Wood |
|---|---|---|---|---|---|
| | | | edge › | Flat | Flat |
| | | | edge ordering code (square corner) › | **LP7S** | **LW7S** |
| | | | top thickness › | 1″ | 1″ |
| | | | top thickness price › | 1″ | 1″ |
| **Base Style** | **Table Description** | **Model #** | **Product Wt** | | |
| T1 | 20 x 90 Fix | **EGT1 2090REFX** | 88 | 1517 | 2269 |
| | 20 x 90 Slim-Tilt | **EGT1 2090REST** | 91 | 1982 | 2739 |
| | 20 x 90 Fix w/FixMod | **EGT1 2090REFX XM** | 110 | 2404 | 3911 |
| | 20 x 90 Fix w/RemMod | **EGT1 2090REFX RM** | 92 | 2444 | 3951 |
| | 20 x 90 Slim-Tilt w/RemMod | **EGT1 2090REST RM** | 95 | 2941 | 4446 |
| | 20 x 90 Slim-Tilt w/HangMod | **EGT1 2090REST HM** | 113 | 2941 | 4446 |
| | 20 x 96 Fix | **EGT1 2096REFX** | 92 | 1557 | 2310 |
| | 20 x 96 Slim-Tilt | **EGT1 2096REST** | 96 | 2053 | 2807 |
| | 20 x 96 Fix w/FixMod | **EGT1 2096REFX XM** | 116 | 2404 | 3911 |
| | 20 x 96 Fix w/RemMod | **EGT1 2096REFX RM** | 97 | 2444 | 3951 |
| | 20 x 96 Slim-Tilt w/RemMod | **EGT1 2096REST RM** | 101 | 2941 | 4446 |
| | 20 x 96 Slim-Tilt w/HangMod | **EGT1 2096REST HM** | 120 | 2941 | 4446 |

**Note:** Training tables are often used with lightweight computer accessories. For heavy duty applications, such as large scale computer equipment, multiple monitor mounts, etc., Versteel suggests adding a third leg or stretcher. The price of the 84", 90" and 96" models include a stretcher rail required for additional support. Contact Customer Service if you have specific application concerns or questions.

**To Order, Specify...**

1. Model Number
2. Top Material
3. Edge Style and Thickness
4. Edge Color
5. Base Color
6. Additional Options

### Finish Options

| | | |
|---|---|---|
| Chrome | | $ 624 |
| Nickel | | $ 682 |
| Powder Coat, Standard | | n/c |
| Powder Coat, Premium | | $ 158 |
| Platinum | | $ 469 |

### Top Options

| | | |
|---|---|---|
| Table Link (all four sides) | TLK | $ 241 |
| Table Link (20" ends only) | TLE | $ 129 |
| Special Laminate | TSP | call |
| Custom Cutout (per cutout) | TCC | $ 115 |

### Power + Data Options

Please reference the Power + Data Price List

### Wire Management Options

| | | |
|---|---|---|
| 1 Oval Brush Grommet, Location A | WOA | $ 93 |
| 2 Oval Brush Grommets, Location E | WOE | $ 186 |
| 1 Oval Brush Grommet, Provide Location Print | WOG | $ 93 |
| 1 Round Grommet, Location A | WRA | $ 73 |
| 2 Round Grommets, Location E | WRE | $ 146 |
| 1 Round Grommet, Provide Location Print | WRG | $ 73 |

# Training Tables
## Eliga



**Questions?**
800 876 2120

| | | | top › | Laminate PVC | Laminate Wood |
|---|---|---|---|---|---|
| | | | edge › | Flat | Flat |
| | | | edge ordering code (square corner) › | **LP7S** | **LW7S** |
| | | | top thickness › | 1″ | 1″ |
| | | | top thickness price › | 1″ | 1″ |
| **Base Style** | **Table Description** | **Model #** | **Product Wt** | | |
| T1 | 24 x 48 Fix | **EGT1 2448REFX** | 55 | 1199 | 1631 |
| | 24 x 48 Slim-Tilt | **EGT1 2448REST** | 64 | 1699 | 2131 |
| | 24 x 48 Fix w/FixMod | **EGT1 2448REFX XM** | 68 | 1502 | 1540 |
| | 24 x 48 Fix w/RemMod | **EGT1 2448REFX RM** | 57 | 1523 | 1588 |
| | 24 x 48 Slim-Tilt w/RemMod | **EGT1 2448REST RM** | 66 | 2037 | 2086 |
| | 24 x 48 Slim-Tilt w/HangMod | **EGT1 2448REST HM** | 77 | 2037 | 2086 |
| | 24 x 48 Fix w/FixLightweightFormMod | **EGT1 2448REFX XL** | 67 | 1523 | 1588 |
| | 24 x 48 Fix w/RemLightweightFormMod | **EGT1 2448REFX RL** | 67 | 1523 | 1588 |
| | 24 x 48 Fix w/FixFormMod | **EGT1 2448REFX XF** | 77 | 1631 | 1686 |
| | 24 x 60 Fix | **EGT1 2460REFX** | 63 | 1280 | 1821 |
| | 24 x 60 Slim-Tilt | **EGT1 2460REST** | 75 | 1777 | 2131 |
| | 24 x 60 Fix w/FixMod | **EGT1 2460REFX XM** | 78 | 1691 | 1765 |
| | 24 x 60 Fix w/RemMod | **EGT1 2460REFX RM** | 66 | 1738 | 1813 |
| | 24 x 60 Slim-Tilt w/RemMod | **EGT1 2460REST RM** | 78 | 2235 | 2305 |
| | 24 x 60 Slim-Tilt w/HangMod | **EGT1 2460REST HM** | 90 | 2235 | 2305 |
| | 24 x 60 Fix w/FixLightweightFormMod | **EGT1 2460REFX XL** | 78 | 1738 | 1813 |
| | 24 x 60 Fix w/RemLightweightFormMod | **EGT1 2460REFX RL** | 78 | 1738 | 1813 |
| | 24 x 60 Fix w/FixFormMod | **EGT1 2460REFX XF** | 90 | 2001 | 2075 |
| | 24 x 72 Fix | **EGT1 2472REFX** | 70 | 1469 | 2051 |
| | 24 x 72 Slim-Tilt | **EGT1 2472REST** | 85 | 1962 | 2552 |
| | 24 x 72 Fix w/FixMod | **EGT1 2472REFX XM** | 87 | 1951 | 2014 |
| | 24 x 72 Fix w/RemMod | **EGT1 2472REFX RM** | 74 | 1996 | 2060 |
| | 24 x 72 Slim-Tilt w/RemMod | **EGT1 2472REST RM** | 89 | 2493 | 2559 |
| | 24 x 72 Slim-Tilt w/HangMod | **EGT1 2472REST HM** | 102 | 2493 | 2559 |
| | 24 x 72 Fix w/FixLightweightFormMod | **EGT1 2472REFX XL** | 88 | 1999 | 2062 |
| | 24 x 72 Fix w/RemLightweightFormMod | **EGT1 2472REFX RL** | 88 | 1999 | 2062 |
| | 24 x 72 Fix w/FixFormMod | **EGT1 2472REFX XF** | 102 | 2185 | 2250 |
| | 24 x 84 Fix | **EGT1 2484REFX** | 94 | 1549 | 2273 |
| | 24 x 84 Slim-Tilt | **EGT1 2484REST** | 97 | 2046 | 2771 |
| | 24 x 84 Fix w/FixMod | **EGT1 2484REFX XM** | 114 | 2192 | 2198 |
| | 24 x 84 Fix w/RemMod | **EGT1 2484REFX RM** | 98 | 2220 | 2230 |
| | 24 x 84 Slim-Tilt w/RemMod | **EGT1 2484REST RM** | 101 | 2733 | 3912 |
| | 24 x 84 Slim-Tilt w/HangMod | **EGT1 2484REST HM** | 117 | 2733 | 3912 |

**Note:** Training tables are often used with lightweight computer accessories. For heavy duty applications, such as large scale computer equipment, multiple monitor mounts, etc., Versteel suggests adding a third leg or stretcher. The price of the 84", 90" and 96" models include a stretcher rail required for additional support. Contact Customer Service if you have specific application concerns or questions.

**To Order, Specify...**

1. Model Number
2. Top Material
3. Edge Style and Thickness
4. Edge Color
5. Base Color
6. Additional Options

| Base Options | Code | Price |
|---|---|---|
| Casters (4), Dual Wheel Black Hard Wheel (to 72" length) | CAS55 | $ 164 |
| Casters (4), Dual Wheel Black Soft Wheel (to 72" length) | CAS57 | $ 164 |

| Finish Options | | |
|---|---|---|
| Chrome | | $ 624 |
| Nickel | | $ 682 |
| Powder Coat, Standard | | n/c |
| Powder Coat, Premium | | $ 158 |
| Platinum | | $ 469 |

| Top Options | | |
|---|---|---|
| Table Link (all four sides) | TLK | $ 241 |
| Table Link (24" ends only) | TLE | $ 129 |
| Special Laminate | TSP | call |
| Custom Cutout (per cutout) | TCC | $ 115 |

**Power + Data Options**

Please reference the Power + Data Price List

| Wire Management Options | | |
|---|---|---|
| 1 Oval Brush Grommet, Location A | WOA | $ 93 |
| 2 Oval Brush Grommets, Location E | WOE | $ 186 |
| 1 Oval Brush Grommet, Provide Location Print | WOG | $ 93 |
| 1 Round Grommet, Location A | WRA | $ 73 |
| 2 Round Grommets, Location E | WRE | $ 146 |
| 1 Round Grommet, Provide Location Print | WRG | $ 73 |

# Training Tables
## Eliga



**Questions?**
800 876 2120

| | | | top › | Laminate PVC | Laminate Wood |
|---|---|---|---|---|---|
| | | | edge › | Flat | Flat |
| | | | edge ordering code (square corner) › | **LP7S** | **LW7S** |
| | | | top thickness › | 1″ | 1″ |
| | | | top thickness price › | 1″ | 1″ |
| **Base Style** | **Table Description** | **Model #** | **Product Wt** | | |
| T1 | 24 x 90 Fix | **EGT1 2490REFX** | 100 | 1675 | 2468 |
| | 24 x 90 Slim-Tilt | **EGT1 2490REST** | 103 | 2181 | 2945 |
| | 24 x 90 Fix w/FixMod | **EGT1 2490REFX XM** | 122 | 2655 | 4168 |
| | 24 x 90 Fix w/RemMod | **EGT1 2490REFX RM** | 104 | 2769 | 3601 |
| | 24 x 90 Slim-Tilt w/RemMod | **EGT1 2490REST RM** | 107 | 3264 | 4096 |
| | 24 x 90 Slim-Tilt w/HangMod | **EGT1 2490REST HM** | 125 | 3264 | 4096 |
| | 24 x 96 Fix | **EGT1 2496REFX** | 105 | 1790 | 2621 |
| | 24 x 96 Slim-Tilt | **EGT1 2496REST** | 109 | 2286 | 3121 |
| | 24 x 96 Fix w/FixMod | **EGT1 2496REFX XM** | 129 | 2655 | 4168 |
| | 24 x 96 Fix w/RemMod | **EGT1 2496REFX RM** | 110 | 2769 | 3601 |
| | 24 x 96 Slim-Tilt w/RemMod | **EGT1 2496REST RM** | 114 | 3264 | 4096 |
| | 24 x 96 Slim-Tilt w/HangMod | **EGT1 2496REST HM** | 133 | 3264 | 4096 |

**Note:** Training tables are often used with lightweight computer accessories. For heavy duty applications, such as large scale computer equipment, multiple monitor mounts, etc., Versteel suggests adding a third leg or stretcher. The price of the 84", 90" and 96" models include a stretcher rail required for additional support. Contact Customer Service if you have specific application concerns or questions.

**To Order, Specify...**
1. Model Number
2. Top Material
3. Edge Style and Thickness
4. Edge Color
5. Base Color
6. Additional Options

### Finish Options

| | | |
|---|---|---|
| Chrome | | $ 624 |
| Nickel | | $ 682 |
| Powder Coat, Standard | | n/c |
| Powder Coat, Premium | | $ 158 |
| Platinum | | $ 469 |

### Top Options

| | | |
|---|---|---|
| Table Link (all four sides) | TLK | $ 241 |
| Table Link (24" ends only) | TLE | $ 129 |
| Special Laminate | TSP | call |
| Custom Cutout (per cutout) | TCC | $ 115 |

### Power + Data Options

Please reference the Power + Data Price List

### Wire Management Options

| | | |
|---|---|---|
| 1 Oval Brush Grommet, Location A | WOA | $ 93 |
| 2 Oval Brush Grommets, Location E | WOE | $ 186 |
| 1 Oval Brush Grommet, Provide Location Print | WOG | $ 93 |
| 1 Round Grommet, Location A | WRA | $ 73 |
| 2 Round Grommets, Location E | WRE | $ 146 |
| 1 Round Grommet, Provide Location Print | WRG | $ 73 |

# Training Tables
Eliga



**Questions?**
800 876 2120

| | | | top › | Laminate PVC | Laminate Wood |
|---|---|---|---|---|---|
| | | | edge › | Flat | Flat |
| | | | edge ordering code (square corner) › | **LP7S** | **LW7S** |
| | | | top thickness › | 1" | 1" |
| | | | top thickness price › | 1" | 1" |
| **Base Style** | **Table Description** | **Model #** | **Product Wt** | | |
| T1 | 30 x 48 Fix | **EGT1 3048REFX** | 63 | 1322 | 1775 |
| | 30 x 48 Slim-Tilt | **EGT1 3048REST** | 75 | 1822 | 2273 |
| | 30 x 48 Fix w/FixMod | **EGT1 3048REFX XM** | 76 | 1626 | 2273 |
| | 30 x 48 Fix w/RemMod | **EGT1 3048REFX RM** | 66 | 1654 | 2289 |
| | 30 x 48 Slim-Tilt w/RemMod | **EGT1 3048REST RM** | 78 | 2172 | 2823 |
| | 30 x 48 Slim-Tilt w/HangMod | **EGT1 3048REST HM** | 88 | 2172 | 2823 |
| | 30 x 48 Fix w/FixLightweightFormMod | **EGT1 3048REFX XL** | 75 | 1654 | 2289 |
| | 30 x 48 Fix w/RemLightweightFormMod | **EGT1 3048REFX RL** | 75 | 1654 | 2668 |
| | 30 x 48 Fix w/FixFormMod | **EGT1 3048REFX XF** | 85 | 1770 | 2254 |
| | 30 x 60 Fix | **EGT1 3060REFX** | 73 | 1403 | 1985 |
| | 30 x 60 Slim-Tilt | **EGT1 3060REST** | 87 | 1901 | 2481 |
| | 30 x 60 Fix w/FixMod | **EGT1 3060REFX XM** | 88 | 1817 | 2764 |
| | 30 x 60 Fix w/RemMod | **EGT1 3060REFX RM** | 76 | 1862 | 2839 |
| | 30 x 60 Slim-Tilt w/RemMod | **EGT1 3060REST RM** | 90 | 2360 | 3306 |
| | 30 x 60 Slim-Tilt w/HangMod | **EGT1 3060REST HM** | 102 | 2360 | 3306 |
| | 30 x 60 Fix w/FixLightweightFormMod | **EGT1 3060REFX XL** | 88 | 1862 | 2806 |
| | 30 x 60 Fix w/RemLightweightFormMod | **EGT1 3060REFX RL** | 88 | 1862 | 2806 |
| | 30 x 60 Fix w/FixFormMod | **EGT1 3060REFX XF** | 100 | 2124 | 2707 |
| | 30 x 72 Fix | **EGT1 3072REFX** | 83 | 1512 | 2195 |
| | 30 x 72 Slim-Tilt | **EGT1 3072REST** | 100 | 2011 | 2690 |
| | 30 x 72 Fix w/FixMod | **EGT1 3072REFX XM** | 100 | 2000 | 3362 |
| | 30 x 72 Fix w/RemMod | **EGT1 3072REFX RM** | 87 | 2046 | 3404 |
| | 30 x 72 Slim-Tilt w/RemMod | **EGT1 3072REST RM** | 104 | 2544 | 3901 |
| | 30 x 72 Slim-Tilt w/HangMod | **EGT1 3072REST HM** | 117 | 2544 | 3901 |
| | 30 x 72 Fix w/FixLightweightFormMod | **EGT1 3072REFX XL** | 101 | 2047 | 3405 |
| | 30 x 72 Fix w/RemLightweightFormMod | **EGT1 3072REFX RL** | 101 | 2047 | 3405 |
| | 30 x 72 Fix w/FixFormMod | **EGT1 3072REFX XF** | 115 | 2237 | 2918 |
| | 30 x 84 Fix | **EGT1 3084REFX** | 109 | 1622 | 2476 |
| | 30 x 84 Slim-Tilt | **EGT1 3084REST** | 114 | 2117 | 2973 |
| | 30 x 84 Fix w/FixMod | **EGT1 3084REFX XM** | 129 | 2276 | 3620 |
| | 30 x 84 Fix w/RemMod | **EGT1 3084REFX RM** | 113 | 2308 | 3642 |
| | 30 x 84 Slim-Tilt w/RemMod | **EGT1 3084REST RM** | 118 | 2732 | 4475 |
| | 30 x 84 Slim-Tilt w/HangMod | **EGT1 3084REST HM** | 134 | 2732 | 4475 |

**Note:** Training tables are often used with lightweight computer accessories. For heavy duty applications, such as large scale computer equipment, multiple monitor mounts, etc., Versteel suggests adding a third leg or stretcher. The price of the 84", 90" and 96" models include a stretcher rail required for additional support. Contact Customer Service if you have specific application concerns or questions.

**To Order, Specify...**
1. Model Number
2. Top Material
3. Edge Style and Thickness
4. Edge Color
5. Base Color
6. Additional Options

| Base Options | Code | Price |
|---|---|---|
| Casters (4), Dual Wheel Black Hard Wheel (to 72" length) | CAS55 | $ 164 |
| Casters (4), Dual Wheel Black Soft Wheel (to 72" length) | CAS57 | $ 164 |

| Finish Options | | |
|---|---|---|
| Chrome | | $ 624 |
| Nickel | | $ 682 |
| Powder Coat, Standard | | n/c |
| Powder Coat, Premium | | $ 158 |
| Platinum | | $ 469 |

| Top Options | | |
|---|---|---|
| Table Link (all four sides) | TLK | $ 241 |
| Table Link (30" ends only) | TLE | $ 129 |
| Special Laminate | TSP | call |
| Custom Cutout (per cutout) | TCC | $ 115 |

**Power + Data Options**

Please reference the Power + Data Price List

| Wire Management Options | | |
|---|---|---|
| 1 Oval Brush Grommet, Location A | WOA | $ 93 |
| 2 Oval Brush Grommets, Location E | WOE | $ 186 |
| 1 Oval Brush Grommet, Provide Location Print | WOG | $ 93 |
| 1 Round Grommet, Location A | WRA | $ 73 |
| 2 Round Grommets, Location E | WRE | $ 146 |
| 1 Round Grommet, Provide Location Print | WRG | $ 73 |

# Training Tables
## Eliga



**Questions?**
800 876 2120

| | | | top › | Laminate PVC | Laminate Wood |
|---|---|---|---|---|---|
| | | | edge › | Flat | Flat |
| | | | edge ordering code (square corner) › | **LP7S** | **LW7S** |
| | | | top thickness › | 1″ | 1″ |
| | | | top thickness price › | 1″ | 1″ |
| **Base Style** | **Table Description** | **Model #** | **Product Wt** | | |
| T1 | 30 x 90 Fix | **EGT1 3090REFX** | 116 | 1730 | 2673 |
| | 30 x 90 Slim-Tilt | **EGT1 3090REST** | 121 | 2220 | 3113 |
| | 30 x 90 Fix w/FixMod | **EGT1 3090REFX XM** | 138 | 2669 | 4440 |
| | 30 x 90 Fix w/RemMod | **EGT1 3090REFX RM** | 120 | 2710 | 4482 |
| | 30 x 90 Slim-Tilt w/RemMod | **EGT1 3090REST RM** | 125 | 3207 | 4978 |
| | 30 x 90 Slim-Tilt w/HangMod | **EGT1 3090REST HM** | 143 | 3207 | 4978 |
| | 30 x 96 Fix | **EGT1 3096REFX** | 122 | 1821 | 2839 |
| | 30 x 96 Slim-Tilt | **EGT1 3096REST** | 128 | 2319 | 3338 |
| | 30 x 96 Fix w/FixMod | **EGT1 3096REFX XM** | 146 | 2669 | 4440 |
| | 30 x 96 Fix w/RemMod | **EGT1 3096REFX RM** | 127 | 2710 | 4482 |
| | 30 x 96 Slim-Tilt w/RemMod | **EGT1 3096REST RM** | 133 | 3207 | 4978 |
| | 30 x 96 Slim-Tilt w/HangMod | **EGT1 3096REST HM** | 152 | 3207 | 4978 |

**Note:** Training tables are often used with lightweight computer accessories. For heavy duty applications, such as large scale computer equipment, multiple monitor mounts, etc., Versteel suggests adding a third leg or stretcher. The price of the 84", 90" and 96" models include a stretcher rail required for additional support. Contact Customer Service if you have specific application concerns or questions.

**To Order, Specify...**

1. Model Number
2. Top Material
3. Edge Style and Thickness
4. Edge Color
5. Base Color
6. Additional Options

### Finish Options

| | | |
|---|---|---|
| Chrome | | $ 624 |
| Nickel | | $ 682 |
| Powder Coat, Standard | | n/c |
| Powder Coat, Premium | | $ 158 |
| Platinum | | $ 469 |

### Top Options

| | | |
|---|---|---|
| Table Link (all four sides) | TLK | $ 241 |
| Table Link (30" ends only) | TLE | $ 129 |
| Special Laminate | TSP | call |
| Custom Cutout (per cutout) | TCC | $ 115 |

### Power + Data Options

Please reference the Power + Data Price List

### Wire Management Options

| | | |
|---|---|---|
| 1 Oval Brush Grommet, Location A | WOA | $ 93 |
| 2 Oval Brush Grommets, Location E | WOE | $ 186 |
| 1 Oval Brush Grommet, Provide Location Print | WOG | $ 93 |
| 1 Round Grommet, Location A | WRA | $ 73 |
| 2 Round Grommets, Location E | WRE | $ 146 |
| 1 Round Grommet, Provide Location Print | WRG | $ 73 |

# Training Tables
## Eliga



**Questions?**
800 876 2120

| | | | top › | Laminate PVC | Laminate Wood |
|---|---|---|---|---|---|
| | | | edge › | Flat | Flat |
| | | | edge ordering code (square corner) › | **LP7S** | **LW7S** |
| | | | top thickness › | 1" | 1" |
| | | | top thickness price › | 1" | 1" |
| **Base Style** | **Table Description** | **Model #** | **Product Wt** | | |
| T1 | 36 x 48 Fix | **EGT1 3648REFX** | 71 | 1455 | 1951 |
| | 36 x 48 Slim-Tilt | **EGT1 3648REST** | 83 | 1990 | 2484 |
| | 36 x 48 Fix w/FixMod | **EGT1 3648REFX XM** | 84 | 1788 | 2501 |
| | 36 x 48 Fix w/RemMod | **EGT1 3648REFX RM** | 74 | 1818 | 2519 |
| | 36 x 48 Slim-Tilt w/RemMod | **EGT1 3648REST RM** | 86 | 2373 | 3089 |
| | 36 x 48 Slim-Tilt w/HangMod | **EGT1 3648REST HM** | 96 | 2373 | 3089 |
| | 36 x 48 Fix w/FixLightweightFormMod | **EGT1 3648REFX XL** | 83 | 1818 | 2519 |
| | 36 x 48 Fix w/RemLightweightFormMod | **EGT1 3648REFX RL** | 83 | 1818 | 2937 |
| | 36 x 48 Fix w/FixFormMod | **EGT1 3648REFX XF** | 93 | 1949 | 2481 |
| | 36 x 60 Fix | **EGT1 3660REFX** | 83 | 1546 | 2180 |
| | 36 x 60 Slim-Tilt | **EGT1 3660REST** | 97 | 2075 | 2713 |
| | 36 x 60 Fix w/FixMod | **EGT1 3660REFX XM** | 98 | 1999 | 3038 |
| | 36 x 60 Fix w/RemMod | **EGT1 3660REFX RM** | 86 | 2047 | 3087 |
| | 36 x 60 Slim-Tilt w/RemMod | **EGT1 3660REST RM** | 100 | 2581 | 3624 |
| | 36 x 60 Slim-Tilt w/HangMod | **EGT1 3660REST HM** | 112 | 2581 | 3624 |
| | 36 x 60 Fix w/FixLightweightFormMod | **EGT1 3660REFX XL** | 98 | 2047 | 3086 |
| | 36 x 60 Fix w/RemLightweightFormMod | **EGT1 3660REFX RL** | 98 | 2047 | 3086 |
| | 36 x 60 Fix w/FixFormMod | **EGT1 3660REFX XF** | 110 | 2340 | 2977 |
| | 36 x 72 Fix | **EGT1 3672REFX** | 95 | 1663 | 2414 |
| | 36 x 72 Slim-Tilt | **EGT1 3672REST** | 112 | 2197 | 2943 |
| | 36 x 72 Fix w/FixMod | **EGT1 3672REFX XM** | 112 | 2200 | 3699 |
| | 36 x 72 Fix w/RemMod | **EGT1 3672REFX RM** | 99 | 2252 | 3744 |
| | 36 x 72 Slim-Tilt w/RemMod | **EGT1 3672REST RM** | 114 | 2781 | 4278 |
| | 36 x 72 Slim-Tilt w/HangMod | **EGT1 3672REST HM** | 129 | 2781 | 4278 |
| | 36 x 72 Fix w/FixLightweightFormMod | **EGT1 3672REFX XL** | 113 | 2254 | 3748 |
| | 36 x 72 Fix w/RemLightweightFormMod | **EGT1 3672REFX RL** | 113 | 2254 | 3748 |
| | 36 x 72 Fix w/FixFormMod | **EGT1 3672REFX XF** | 127 | 2460 | 3209 |
| | 36 x 84 Fix | **EGT1 3684REFX** | 123 | 1783 | 2722 |
| | 36 x 84 Slim-Tilt | **EGT1 3684REST** | 128 | 2313 | 3257 |
| | 36 x 84 Fix w/FixMod | **EGT1 3684REFX XM** | 143 | 2506 | 3980 |
| | 36 x 84 Fix w/RemMod | **EGT1 3684REFX RM** | 127 | 2539 | 4006 |
| | 36 x 84 Slim-Tilt w/RemMod | **EGT1 3684REST RM** | 132 | 2990 | 4911 |
| | 36 x 84 Slim-Tilt w/HangMod | **EGT1 3684REST HM** | 148 | 2990 | 4911 |

**Note:** Training tables are often used with lightweight computer accessories. For heavy duty applications, such as large scale computer equipment, multiple monitor mounts, etc., Versteel suggests adding a third leg or stretcher. The price of the 84", 90" and 96" models include a stretcher rail required for additional support. Contact Customer Service if you have specific application concerns or questions.

**To Order, Specify...**

1. Model Number
2. Top Material
3. Edge Style and Thickness
4. Edge Color
5. Base Color
6. Additional Options

| Base Options | Code | Price |
|---|---|---|
| Casters (4), Dual Wheel Black Hard Wheel (to 72" length) | CAS55 | $ 164 |
| Casters (4), Dual Wheel Black Soft Wheel (to 72" length) | CAS57 | $ 164 |

| Finish Options | | |
|---|---|---|
| Chrome | | $ 624 |
| Nickel | | $ 682 |
| Powder Coat, Standard | | n/c |
| Powder Coat, Premium | | $ 158 |
| Platinum | | $ 469 |

| Top Options | | |
|---|---|---|
| Table Link (all four sides) | TLK | $ 241 |
| Table Link (36" ends only) | TLE | $ 129 |
| Special Laminate | TSP | call |
| Custom Cutout (per cutout) | TCC | $ 115 |

**Power + Data Options**

Please reference the Power + Data Price List

| Wire Management Options | | |
|---|---|---|
| 1 Oval Brush Grommet, Location A | WOA | $ 93 |
| 2 Oval Brush Grommets, Location E | WOE | $ 186 |
| 1 Oval Brush Grommet, Provide Location Print | WOG | $ 93 |
| 1 Round Grommet, Location A | WRA | $ 73 |
| 2 Round Grommets, Location E | WRE | $ 146 |
| 1 Round Grommet, Provide Location Print | WRG | $ 73 |

# Training Tables
## Eliga



**Questions?**
800 876 2120

| | | | top › | Laminate PVC | Laminate Wood |
|---|---|---|---|---|---|
| | | | edge › | Flat | Flat |
| | | | edge ordering code (square corner) › | **LP7S** | **LW7S** |
| | | | top thickness › | 1″ | 1″ |
| | | | top thickness price › | 1″ | 1″ |
| **Base Style** | **Table Description** | **Model #** | **Product Wt** | | |
| T1 | 36 x 90 Fix | **EGT1 3690REFX** | 131 | 1901 | 2940 |
| | 36 x 90 Slim-Tilt | **EGT1 3690REST** | 136 | 2425 | 3410 |
| | 36 x 90 Fix w/FixMod | **EGT1 3690REFX XM** | 153 | 2938 | 4885 |
| | 36 x 90 Fix w/RemMod | **EGT1 3690REFX RM** | 135 | 2978 | 4930 |
| | 36 x 90 Slim-Tilt w/RemMod | **EGT1 3690REST RM** | 140 | 3513 | 5461 |
| | 36 x 90 Slim-Tilt w/HangMod | **EGT1 3690REST HM** | 158 | 3513 | 5461 |
| | 36 x 96 Fix | **EGT1 3696REFX** | 138 | 2001 | 3123 |
| | 36 x 96 Slim-Tilt | **EGT1 3696REST** | 144 | 2535 | 3656 |
| | 36 x 96 Fix w/FixMod | **EGT1 3696REFX XM** | 162 | 2938 | 4885 |
| | 36 x 96 Fix w/RemMod | **EGT1 3696REFX RM** | 143 | 2978 | 4930 |
| | 36 x 96 Slim-Tilt w/RemMod | **EGT1 3696REST RM** | 149 | 3513 | 5461 |
| | 36 x 96 Slim-Tilt w/HangMod | **EGT1 3696REST HM** | 168 | 3513 | 5461 |

**Note:** Training tables are often used with lightweight computer accessories. For heavy duty applications, such as large scale computer equipment, multiple monitor mounts, etc., Versteel suggests adding a third leg or stretcher. The price of the 84", 90" and 96" models include a stretcher rail required for additional support. Contact Customer Service if you have specific application concerns or questions.

**To Order, Specify...**

1. Model Number
2. Top Material
3. Edge Style and Thickness
4. Edge Color
5. Base Color
6. Additional Options

### Finish Options

| | | |
|---|---|---|
| Chrome | | $ 624 |
| Nickel | | $ 682 |
| Powder Coat, Standard | | n/c |
| Powder Coat, Premium | | $ 158 |
| Platinum | | $ 469 |

### Top Options

| | | |
|---|---|---|
| Table Link (all four sides) | TLK | $ 241 |
| Table Link (36" ends only) | TLE | $ 129 |
| Special Laminate | TSP | call |
| Custom Cutout (per cutout) | TCC | $ 115 |

### Power + Data Options

Please reference the Power + Data Price List

### Wire Management Options

| | | |
|---|---|---|
| 1 Oval Brush Grommet, Location A | WOA | $ 93 |
| 2 Oval Brush Grommets, Location E | WOE | $ 186 |
| 1 Oval Brush Grommet, Provide Location Print | WOG | $ 93 |
| 1 Round Grommet, Location A | WRA | $ 73 |
| 2 Round Grommets, Location E | WRE | $ 146 |
| 1 Round Grommet, Provide Location Print | WRG | $ 73 |

# Training Tables
## Eliga



**Questions?**
800 876 2120

| | | | top › | Laminate PVC | Laminate Wood |
|---|---|---|---|---|---|
| | | | edge › | Flat | Flat |
| | | | edge ordering code (square corner) › | **LP7S** | **LW7S** |
| | | | top thickness › | 1″ | 1″ |
| | | | top thickness price › | 1″ | 1″ |
| **Base Style** | **Table Description** | **Model #** | **Product Wt** | | |
| TC | 24 x 48 Fix | **EGTC 2448REFX** | 55 | 1199 | 1631 |
| | 24 x 48 Slim-Tilt | **EGTC 2448REST** | 64 | 1699 | 2131 |
| | 24 x 48 Fix w/FixMod | **EGTC 2448REFX XM** | 68 | 1502 | 1540 |
| | 24 x 48 Fix w/RemMod | **EGTC 2448REFX RM** | 57 | 1523 | 1588 |
| | 24 x 48 Slim-Tilt w/RemMod | **EGTC 2448REST RM** | 66 | 2037 | 2086 |
| | 24 x 48 Slim-Tilt w/HangMod | **EGTC 2448REST HM** | 77 | 2037 | 2086 |
| | 24 x 48 Fix w/FixLightweightFormMod | **EGTC 2448REFX XL** | 67 | 1523 | 1588 |
| | 24 x 48 Fix w/RemLightweightFormMod | **EGTC 2448REFX RL** | 67 | 1523 | 1588 |
| | 24 x 48 Fix w/FixFormMod | **EGTC 2448REFX XF** | 77 | 1631 | 1686 |
| | 24 x 60 Fix | **EGTC 2460REFX** | 63 | 1280 | 1821 |
| | 24 x 60 Slim-Tilt | **EGTC 2460REST** | 75 | 1699 | 2131 |
| | 24 x 60 Fix w/FixMod | **EGTC 2460REFX XM** | 78 | 1691 | 1765 |
| | 24 x 60 Fix w/RemMod | **EGTC 2460REFX RM** | 66 | 1738 | 1813 |
| | 24 x 60 Slim-Tilt w/RemMod | **EGTC 2460REST RM** | 78 | 2235 | 2305 |
| | 24 x 60 Slim-Tilt w/HangMod | **EGTC 2460REST HM** | 90 | 2235 | 2305 |
| | 24 x 60 Fix w/FixLightweightFormMod | **EGTC 2460REFX XL** | 78 | 1738 | 1813 |
| | 24 x 60 Fix w/RemLightweightFormMod | **EGTC 2460REFX RL** | 78 | 1738 | 1813 |
| | 24 x 60 Fix w/FixFormMod | **EGTC 2460REFX XF** | 90 | 2001 | 2075 |
| | 24 x 72 Fix | **EGTC 2472REFX** | 70 | 1469 | 2051 |
| | 24 x 72 Slim-Tilt | **EGTC 2472REST** | 85 | 1962 | 2552 |
| | 24 x 72 Fix w/FixMod | **EGTC 2472REFX XM** | 87 | 1951 | 2014 |
| | 24 x 72 Fix w/RemMod | **EGTC 2472REFX RM** | 74 | 1996 | 2060 |
| | 24 x 72 Slim-Tilt w/RemMod | **EGTC 2472REST RM** | 89 | 2493 | 2559 |
| | 24 x 72 Slim-Tilt w/HangMod | **EGTC 2472REST HM** | 102 | 2493 | 2559 |
| | 24 x 72 Fix w/FixLightweightFormMod | **EGTC 2472REFX XL** | 88 | 1999 | 2062 |
| | 24 x 72 Fix w/RemLightweightFormMod | **EGTC 2472REFX RL** | 88 | 1999 | 2062 |
| | 24 x 72 Fix w/FixFormMod | **EGTC 2472REFX XF** | 102 | 2185 | 2250 |
| | 24 x 84 Fix | **EGTC 2484REFX** | 94 | 1549 | 2273 |
| | 24 x 84 Slim-Tilt | **EGTC 2484REST** | 97 | 2046 | 2771 |
| | 24 x 84 Fix w/FixMod | **EGTC 2484REFX XM** | 114 | 2192 | 2198 |
| | 24 x 84 Fix w/RemMod | **EGTC 2484REFX RM** | 98 | 2220 | 2230 |
| | 24 x 84 Slim-Tilt w/RemMod | **EGTC 2484REST RM** | 101 | 2733 | 3912 |
| | 24 x 84 Slim-Tilt w/HangMod | **EGTC 2484REST HM** | 117 | 2733 | 3912 |

**Note:** Training tables are often used with lightweight computer accessories. For heavy duty applications, such as large scale computer equipment, multiple monitor mounts, etc., Versteel suggests adding a third leg or stretcher. The price of the 84", 90" and 96" models include a stretcher rail required for additional support. Contact Customer Service if you have specific application concerns or questions.

**To Order, Specify...**

1. Model Number
2. Top Material
3. Edge Style and Thickness
4. Edge Color
5. Base Color
6. Additional Options

| Base Options | Code | Price |
|---|---|---|
| Casters (4), Dual Wheel Black Hard Wheel (to 72" length) | CAS55 | $ 164 |
| Casters (4), Dual Wheel Black Soft Wheel (to 72" length) | CAS57 | $ 164 |

| Finish Options | | |
|---|---|---|
| Chrome | | $ 624 |
| Nickel | | $ 682 |
| Powder Coat, Standard | | n/c |
| Powder Coat, Premium | | $ 158 |
| Platinum | | $ 469 |

| Top Options | | |
|---|---|---|
| Table Link (all four sides) | TLK | $ 241 |
| Table Link (24" ends only) | TLE | $ 129 |
| Special Laminate | TSP | call |
| Custom Cutout (per cutout) | TCC | $ 115 |

**Power + Data Options**

Please reference the Power + Data Price List

| Wire Management Options | | |
|---|---|---|
| 1 Oval Brush Grommet, Location A | WOA | $ 93 |
| 2 Oval Brush Grommets, Location E | WOE | $ 186 |
| 1 Oval Brush Grommet, Provide Location Print | WOG | $ 93 |
| 1 Round Grommet, Location A | WRA | $ 73 |
| 2 Round Grommets, Location E | WRE | $ 146 |
| 1 Round Grommet, Provide Location Print | WRG | $ 73 |

# Training Tables
## Eliga



**Questions?**
800 876 2120

| | | | top › | Laminate PVC | Laminate Wood |
|---|---|---|---|---|---|
| | | | edge › | Flat | Flat |
| | | | edge ordering code (square corner) › | **LP7S** | **LW7S** |
| | | | top thickness › | 1″ | 1″ |
| | | | top thickness price › | 1″ | 1″ |
| **Base Style** | **Table Description** | **Model #** | **Product Wt** | | |
| TC | 24 x 90 Fix | **EGTC 2490REFX** | 100 | 1675 | 2468 |
| | 24 x 90 Slim-Tilt | **EGTC 2490REST** | 103 | 2181 | 2945 |
| | 24 x 90 Fix w/FixMod | **EGTC 2490REFX XM** | 122 | 2655 | 4168 |
| | 24 x 90 Fix w/RemMod | **EGTC 2490REFX RM** | 104 | 2769 | 3601 |
| | 24 x 90 Slim-Tilt w/RemMod | **EGTC 2490REST RM** | 107 | 3264 | 4096 |
| | 24 x 90 Slim-Tilt w/HangMod | **EGTC 2490REST HM** | 125 | 3264 | 4096 |
| | 24 x 96 Fix | **EGTC 2496REFX** | 105 | 1790 | 2621 |
| | 24 x 96 Slim-Tilt | **EGTC 2496REST** | 109 | 2286 | 3121 |
| | 24 x 96 Fix w/FixMod | **EGTC 2496REFX XM** | 129 | 2655 | 4168 |
| | 24 x 96 Fix w/RemMod | **EGTC 2496REFX RM** | 110 | 2769 | 3601 |
| | 24 x 96 Slim-Tilt w/RemMod | **EGTC 2496REST RM** | 114 | 3264 | 4096 |
| | 24 x 96 Slim-Tilt w/HangMod | **EGTC 2496REST HM** | 133 | 3264 | 4096 |

**Note:** Training tables are often used with lightweight computer accessories. For heavy duty applications, such as large scale computer equipment, multiple monitor mounts, etc., Versteel suggests adding a third leg or stretcher. The price of the 84", 90" and 96" models include a stretcher rail required for additional support. Contact Customer Service if you have specific application concerns or questions.

**To Order, Specify...**

1. Model Number
2. Top Material
3. Edge Style and Thickness
4. Edge Color
5. Base Color
6. Additional Options

### Finish Options

| | | |
|---|---|---|
| Chrome | | $ 624 |
| Nickel | | $ 682 |
| Powder Coat, Standard | | n/c |
| Powder Coat, Premium | | $ 158 |
| Platinum | | $ 469 |

### Top Options

| | | |
|---|---|---|
| Table Link (all four sides) | TLK | $ 241 |
| Table Link (24" ends only) | TLE | $ 129 |
| Special Laminate | TSP | call |
| Custom Cutout (per cutout) | TCC | $ 115 |

### Power + Data Options

Please reference the Power + Data Price List

### Wire Management Options

| | | |
|---|---|---|
| 1 Oval Brush Grommet, Location A | WOA | $ 93 |
| 2 Oval Brush Grommets, Location E | WOE | $ 186 |
| 1 Oval Brush Grommet, Provide Location Print | WOG | $ 93 |
| 1 Round Grommet, Location A | WRA | $ 73 |
| 2 Round Grommets, Location E | WRE | $ 146 |
| 1 Round Grommet, Provide Location Print | WRG | $ 73 |

# Training Tables
## Eliga



**Questions?**
800 876 2120

| | | | | | |
|---|---|---|---|---|---|
| | | | top › | Laminate PVC | Laminate Wood |
| | | | edge › | Flat | Flat |
| | | | edge ordering code (square corner) › | **LP7S** | **LW7S** |
| | | | top thickness › | 1" | 1" |
| | | | top thickness price › | 1" | 1" |
| **Base Style** | **Table Description** | **Model #** | **Product Wt** | | |
| TC | 30 x 48 Fix | **EGTC 3048REFX** | 63 | 1322 | 1775 |
| | 30 x 48 Slim-Tilt | **EGTC 3048REST** | 75 | 1822 | 2273 |
| | 30 x 48 Fix w/FixMod | **EGTC 3048REFX XM** | 76 | 1626 | 2273 |
| | 30 x 48 Fix w/RemMod | **EGTC 3048REFX RM** | 66 | 1654 | 2289 |
| | 30 x 48 Slim-Tilt w/RemMod | **EGTC 3048REST RM** | 78 | 2172 | 2823 |
| | 30 x 48 Slim-Tilt w/HangMod | **EGTC 3048REST HM** | 88 | 2172 | 2823 |
| | 30 x 48 Fix w/FixLightweightFormMod | **EGTC 3048REFX XL** | 75 | 1654 | 2289 |
| | 30 x 48 Fix w/RemLightweightFormMod | **EGTC 3048REFX RL** | 75 | 1654 | 2668 |
| | 30 x 48 Fix w/FixFormMod | **EGTC 3048REFX XF** | 85 | 1770 | 2254 |
| | 30 x 60 Fix | **EGTC 3060REFX** | 73 | 1403 | 1985 |
| | 30 x 60 Slim-Tilt | **EGTC 3060REST** | 87 | 1901 | 2481 |
| | 30 x 60 Fix w/FixMod | **EGTC 3060REFX XM** | 88 | 1817 | 2764 |
| | 30 x 60 Fix w/RemMod | **EGTC 3060REFX RM** | 76 | 1862 | 2807 |
| | 30 x 60 Slim-Tilt w/RemMod | **EGTC 3060REST RM** | 90 | 2360 | 3306 |
| | 30 x 60 Slim-Tilt w/HangMod | **EGTC 3060REST HM** | 102 | 2360 | 3306 |
| | 30 x 60 Fix w/FixLightweightFormMod | **EGTC 3060REFX XL** | 88 | 1862 | 2806 |
| | 30 x 60 Fix w/RemLightweightFormMod | **EGTC 3060REFX RL** | 88 | 1862 | 2806 |
| | 30 x 60 Fix w/FixFormMod | **EGTC 3060REFX XF** | 100 | 2124 | 2707 |
| | 30 x 72 Fix | **EGTC 3072REFX** | 83 | 1512 | 2195 |
| | 30 x 72 Slim-Tilt | **EGTC 3072REST** | 100 | 2011 | 2690 |
| | 30 x 72 Fix w/FixMod | **EGTC 3072REFX XM** | 100 | 2000 | 3362 |
| | 30 x 72 Fix w/RemMod | **EGTC 3072REFX RM** | 87 | 2046 | 3404 |
| | 30 x 72 Slim-Tilt w/RemMod | **EGTC 3072REST RM** | 104 | 2544 | 3901 |
| | 30 x 72 Slim-Tilt w/HangMod | **EGTC 3072REST HM** | 117 | 2544 | 3901 |
| | 30 x 72 Fix w/FixLightweightFormMod | **EGTC 3072REFX XL** | 101 | 2047 | 3405 |
| | 30 x 72 Fix w/RemLightweightFormMod | **EGTC 3072REFX RL** | 101 | 2047 | 3405 |
| | 30 x 72 Fix w/FixFormMod | **EGTC 3072REFX XF** | 115 | 2237 | 2918 |
| | 30 x 84 Fix | **EGTC 3084REFX** | 109 | 1622 | 2476 |
| | 30 x 84 Slim-Tilt | **EGTC 3084REST** | 114 | 2117 | 2973 |
| | 30 x 84 Fix w/FixMod | **EGTC 3084REFX XM** | 129 | 2276 | 3620 |
| | 30 x 84 Fix w/RemMod | **EGTC 3084REFX RM** | 113 | 2308 | 3642 |
| | 30 x 84 Slim-Tilt w/RemMod | **EGTC 3084REST RM** | 118 | 2732 | 4475 |
| | 30 x 84 Slim-Tilt w/HangMod | **EGTC 3084REST HM** | 134 | 2732 | 4475 |

**Note:** Training tables are often used with lightweight computer accessories. For heavy duty applications, such as large scale computer equipment, multiple monitor mounts, etc., Versteel suggests adding a third leg or stretcher. The price of the 84", 90" and 96" models include a stretcher rail required for additional support. Contact Customer Service if you have specific application concerns or questions.

**To Order, Specify...**
1. Model Number
2. Top Material
3. Edge Style and Thickness
4. Edge Color
5. Base Color
6. Additional Options

| Base Options | Code | Price |
|---|---|---|
| Casters (4), Dual Wheel Black Hard Wheel (to 72" length) | CAS55 | $ 164 |
| Casters (4), Dual Wheel Black Soft Wheel (to 72" length) | CAS57 | $ 164 |

| Finish Options | | |
|---|---|---|
| Chrome | | $ 624 |
| Nickel | | $ 682 |
| Powder Coat, Standard | | n/c |
| Powder Coat, Premium | | $ 158 |
| Platinum | | $ 469 |

| Top Options | | |
|---|---|---|
| Table Link (all four sides) | TLK | $ 241 |
| Table Link (30" ends only) | TLE | $ 129 |
| Special Laminate | TSP | call |
| Custom Cutout (per cutout) | TCC | $ 115 |

**Power + Data Options**

Please reference the Power + Data Price List

| Wire Management Options | | |
|---|---|---|
| 1 Oval Brush Grommet, Location A | WOA | $ 93 |
| 2 Oval Brush Grommets, Location E | WOE | $ 186 |
| 1 Oval Brush Grommet, Provide Location Print | WOG | $ 93 |
| 1 Round Grommet, Location A | WRA | $ 73 |
| 2 Round Grommets, Location E | WRE | $ 146 |
| 1 Round Grommet, Provide Location Print | WRG | $ 73 |

# Training Tables
## Eliga



**Questions?**
800 876 2120

| | | | top › | Laminate PVC | Laminate Wood |
|---|---|---|---|---|---|
| | | | edge › | Flat | Flat |
| | | | edge ordering code (square corner) › | **LP7S** | **LW7S** |
| | | | top thickness › | 1″ | 1″ |
| | | | top thickness price › | 1″ | 1″ |
| **Base Style** | **Table Description** | **Model #** | **Product Wt** | | |
| TC | 30 x 90 Fix | **EGTC 3090REFX** | 116 | 1730 | 2673 |
| | 30 x 90 Slim-Tilt | **EGTC 3090REST** | 121 | 2220 | 3113 |
| | 30 x 90 Fix w/FixMod | **EGTC 3090REFX XM** | 138 | 2669 | 4440 |
| | 30 x 90 Fix w/RemMod | **EGTC 3090REFX RM** | 120 | 2710 | 4482 |
| | 30 x 90 Slim-Tilt w/RemMod | **EGTC 3090REST RM** | 125 | 3207 | 4978 |
| | 30 x 90 Slim-Tilt w/HangMod | **EGTC 3090REST HM** | 143 | 3207 | 4978 |
| | 30 x 96 Fix | **EGTC 3096REFX** | 122 | 1821 | 2839 |
| | 30 x 96 Slim-Tilt | **EGTC 3096REST** | 128 | 2319 | 3338 |
| | 30 x 96 Fix w/FixMod | **EGTC 3096REFX XM** | 146 | 2669 | 4440 |
| | 30 x 96 Fix w/RemMod | **EGTC 3096REFX RM** | 127 | 2710 | 4482 |
| | 30 x 96 Slim-Tilt w/RemMod | **EGTC 3096REST RM** | 133 | 3207 | 4978 |
| | 30 x 96 Slim-Tilt w/HangMod | **EGTC 3096REST HM** | 152 | 3207 | 4978 |

**Note:** Training tables are often used with lightweight computer accessories. For heavy duty applications, such as large scale computer equipment, multiple monitor mounts, etc., Versteel suggests adding a third leg or stretcher. The price of the 84", 90" and 96" models include a stretcher rail required for additional support. Contact Customer Service if you have specific application concerns or questions.

**To Order, Specify...**

1. Model Number
2. Top Material
3. Edge Style and Thickness
4. Edge Color
5. Base Color
6. Additional Options

### Finish Options

| | | |
|---|---|---|
| Chrome | | $ 624 |
| Nickel | | $ 682 |
| Powder Coat, Standard | | n/c |
| Powder Coat, Premium | | $ 158 |
| Platinum | | $ 469 |

### Top Options

| | | |
|---|---|---|
| Table Link (all four sides) | TLK | $ 241 |
| Table Link (30" ends only) | TLE | $ 129 |
| Special Laminate | TSP | call |
| Custom Cutout (per cutout) | TCC | $ 115 |

### Power + Data Options

Please reference the Power + Data Price List

### Wire Management Options

| | | |
|---|---|---|
| 1 Oval Brush Grommet, Location A | WOA | $ 93 |
| 2 Oval Brush Grommets, Location E | WOE | $ 186 |
| 1 Oval Brush Grommet, Provide Location Print | WOG | $ 93 |
| 1 Round Grommet, Location A | WRA | $ 73 |
| 2 Round Grommets, Location E | WRE | $ 146 |
| 1 Round Grommet, Provide Location Print | WRG | $ 73 |

All prices are delivered list price effective with date printed on cover and supersedes all other published price lists. Versteel reserves the right to change prices or specifications without prior notice. Orders are accepted subject to price prevailing at time of shipment.

**versteel.com**
Made in America
800 876 2120